MECHANICAL

Miniatures



MECHANICAL
Miniatures



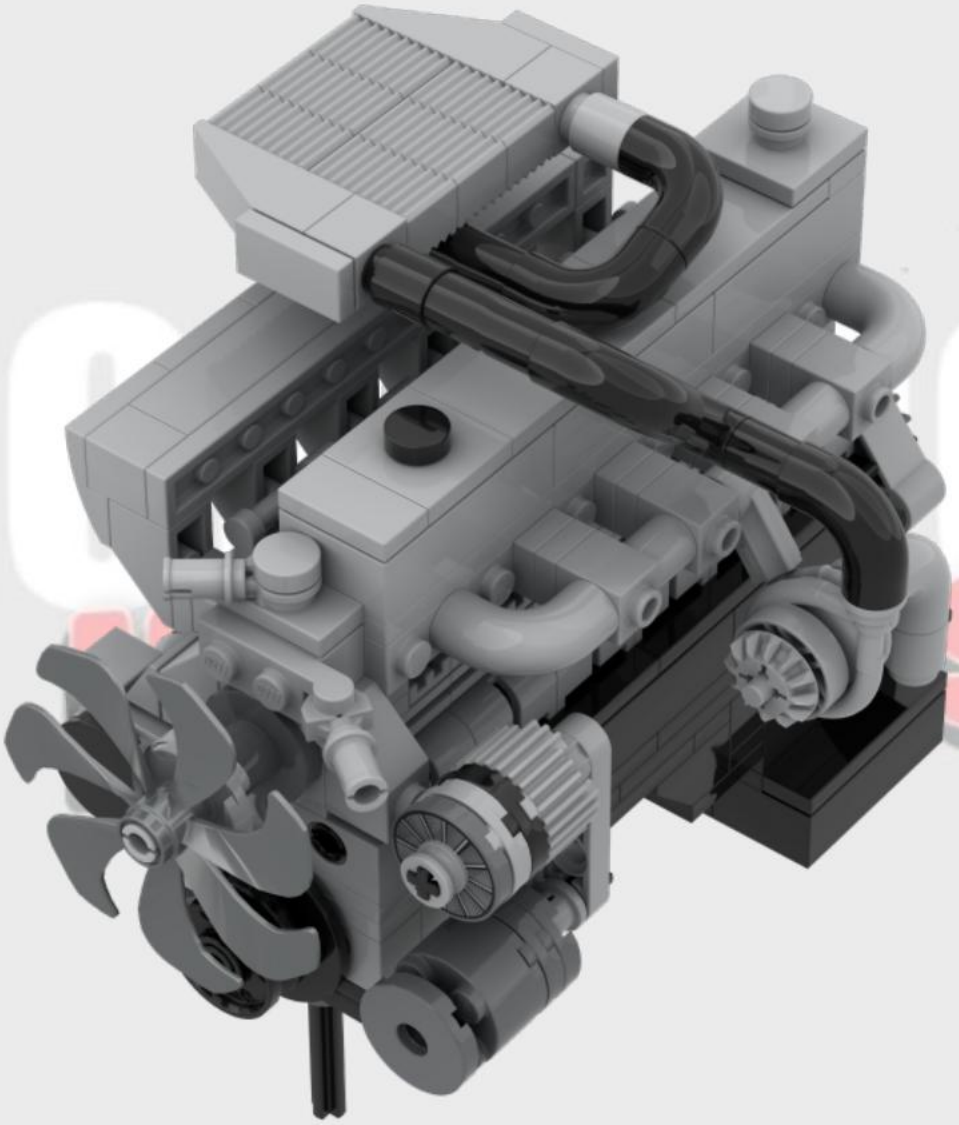

1

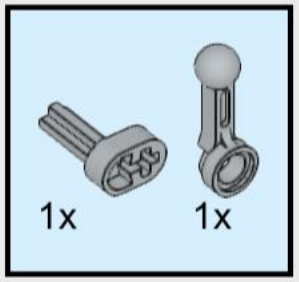

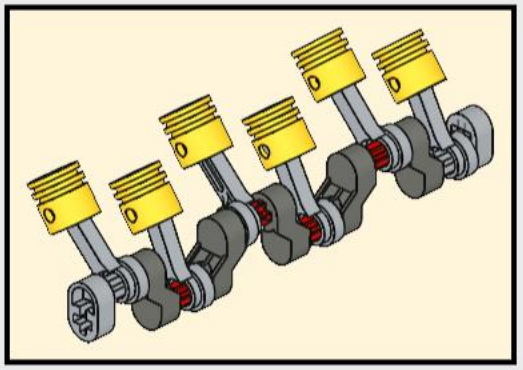

MECHANICAL
Miniatures

2

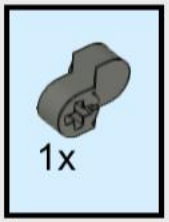

MECHANICAL
Miniatures

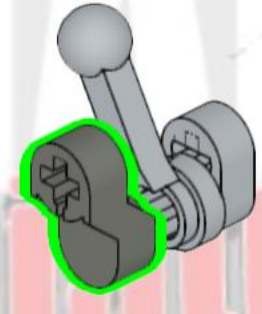

3

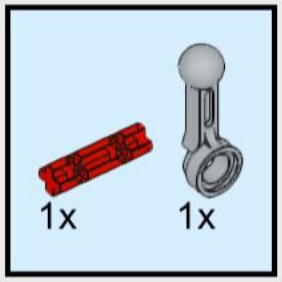

MECHANICAL
Miniatures

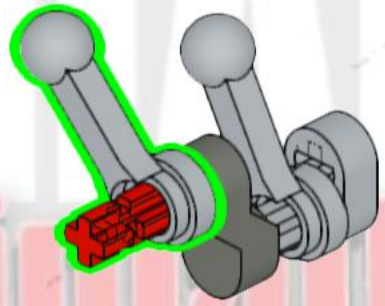

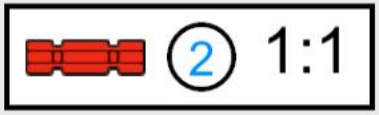

4

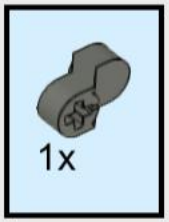

MECHANICAL Miniatures

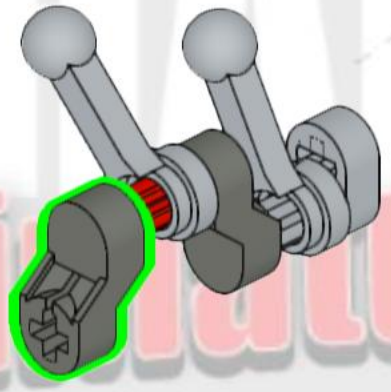

5

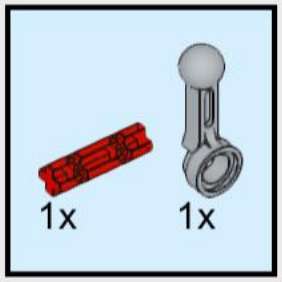

MECHANICAL
Miniatures

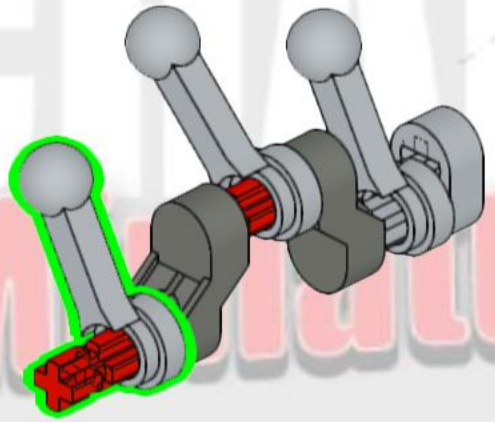

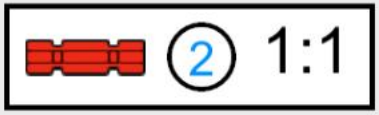

6

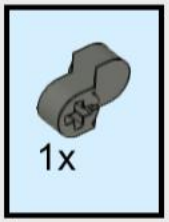

MECHANICAL Miniatures

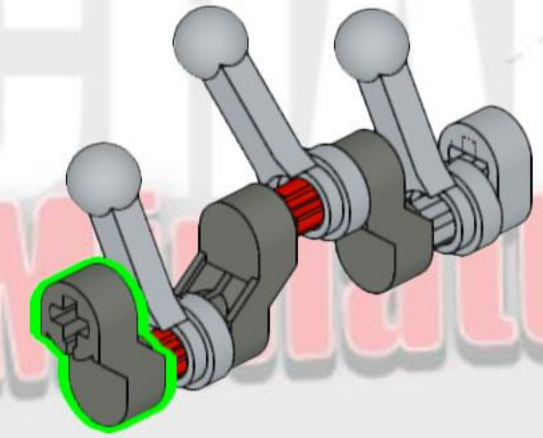

7

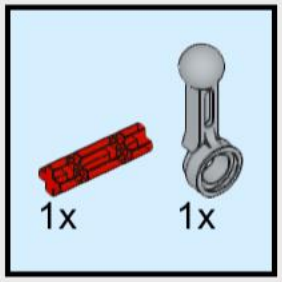

MECHANICAL
miniatures

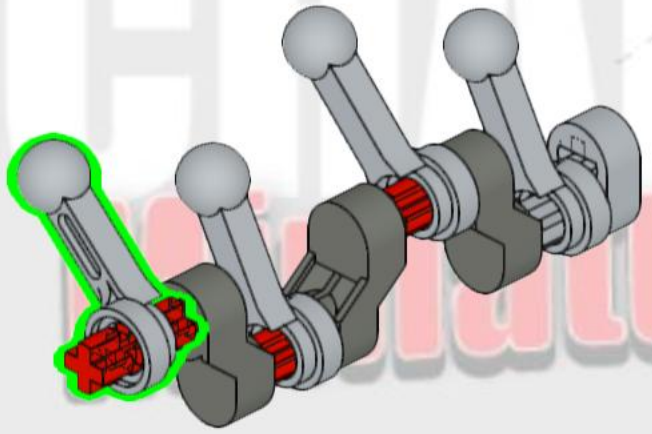

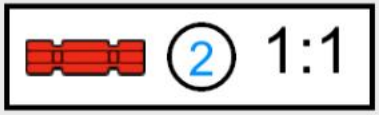

8



MECHANICAL
miniatures

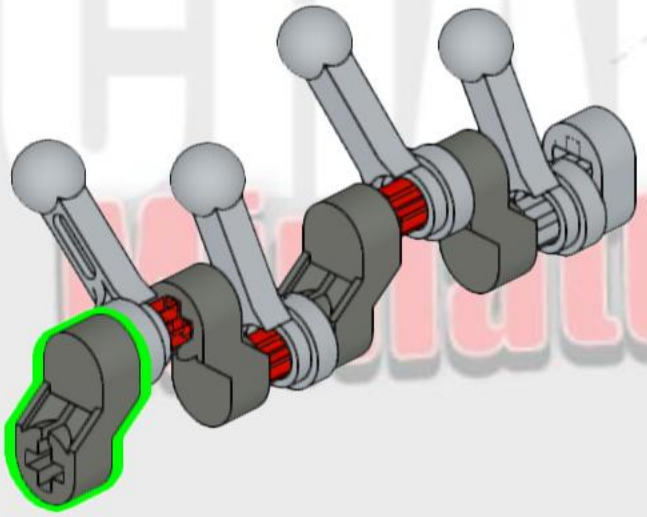

9

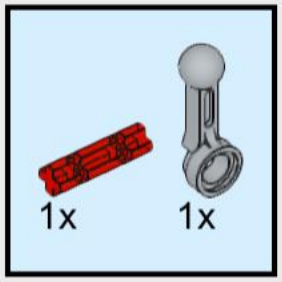

MECHANICAL
miniatures

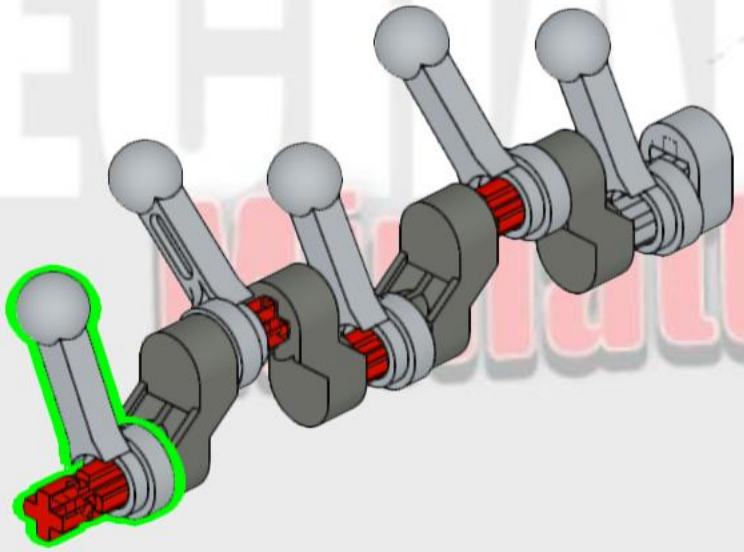

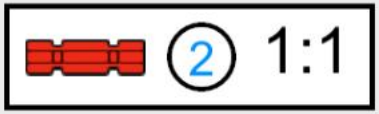

10



MECHANICAL
miniatures

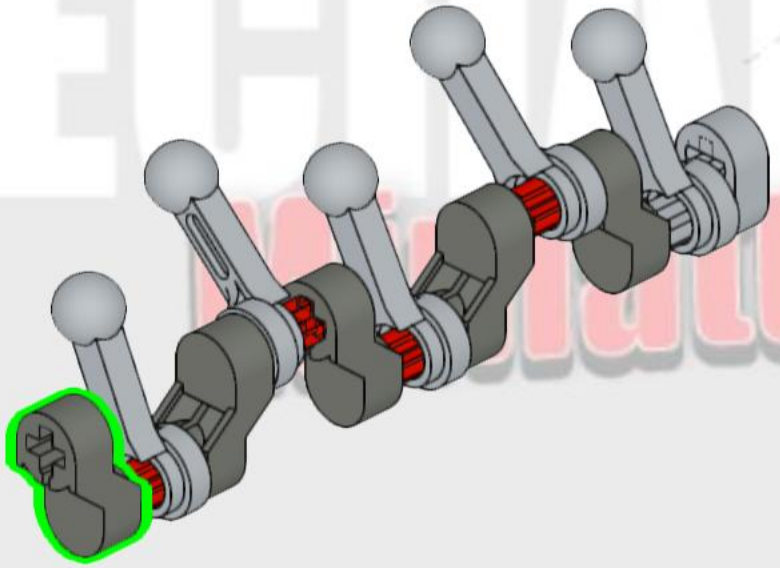

11

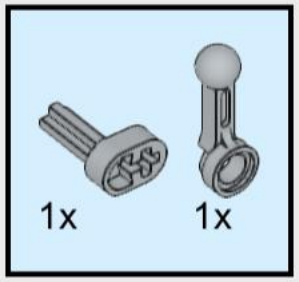

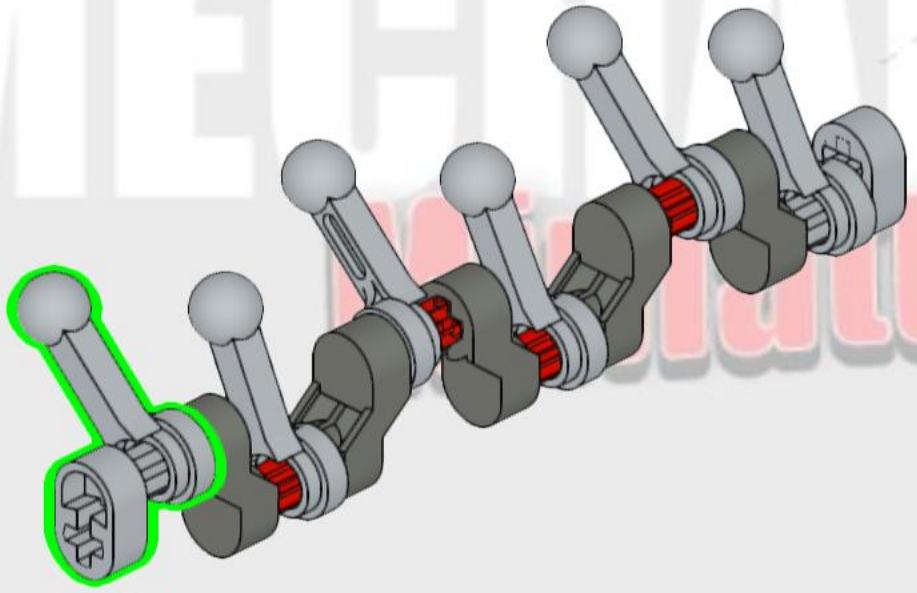

MECHANICAL
miniatures

12

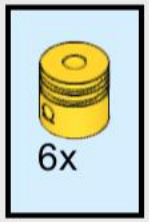

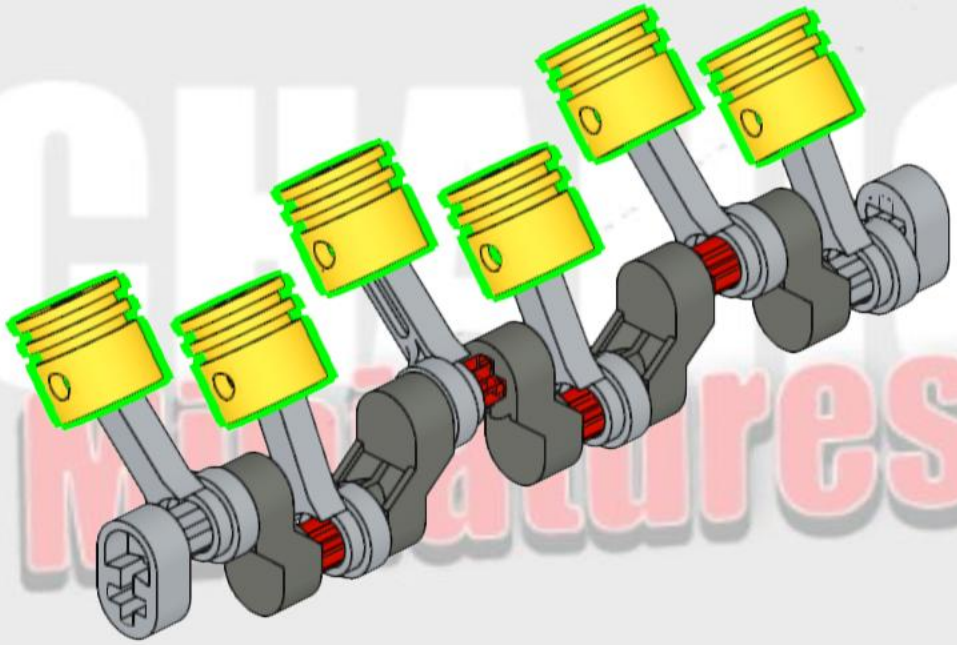

MECHANICAL Miniatures

13

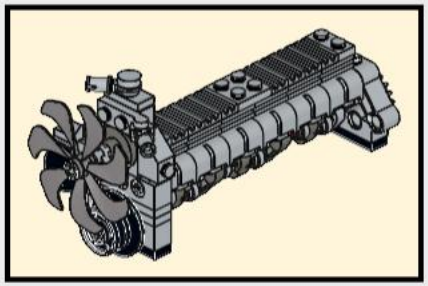

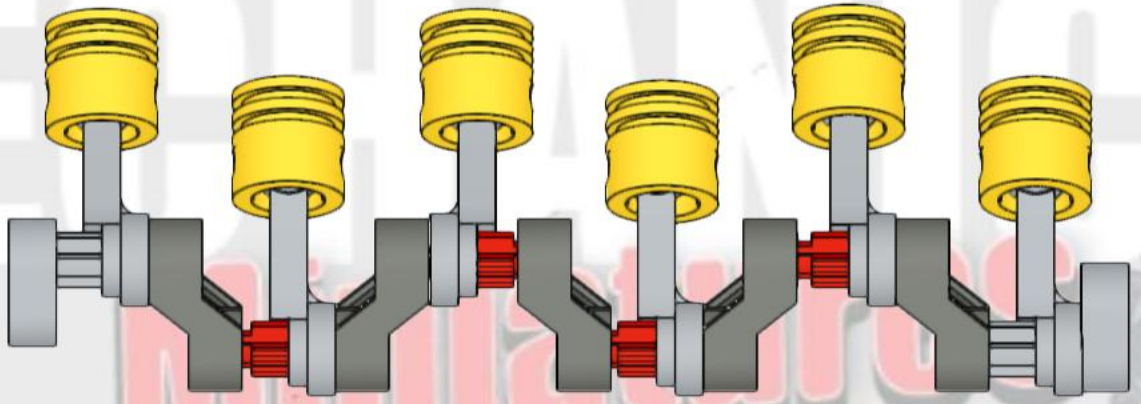

14

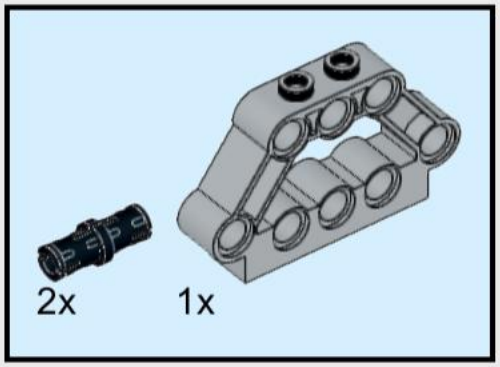

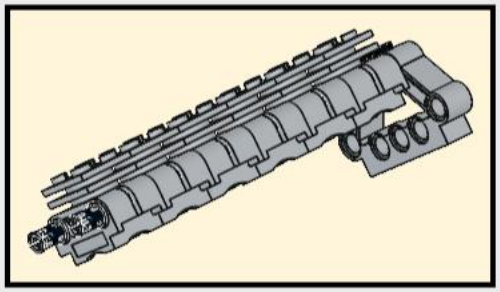



MECHANICAL
Miniatures

15

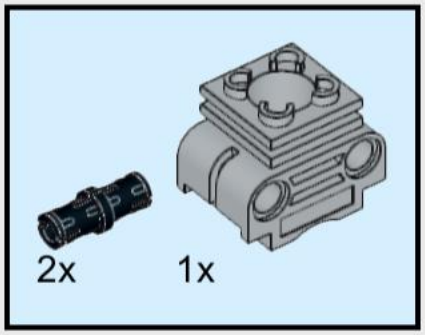

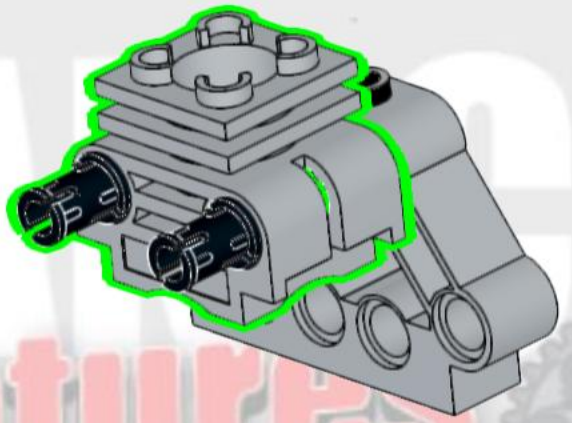

MECHANICAL
Miniatures

16

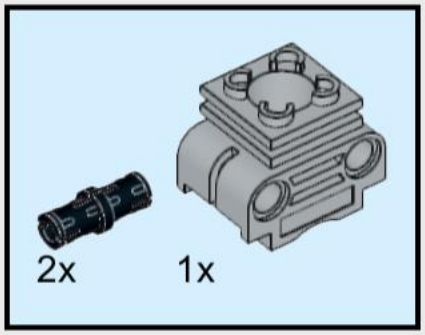

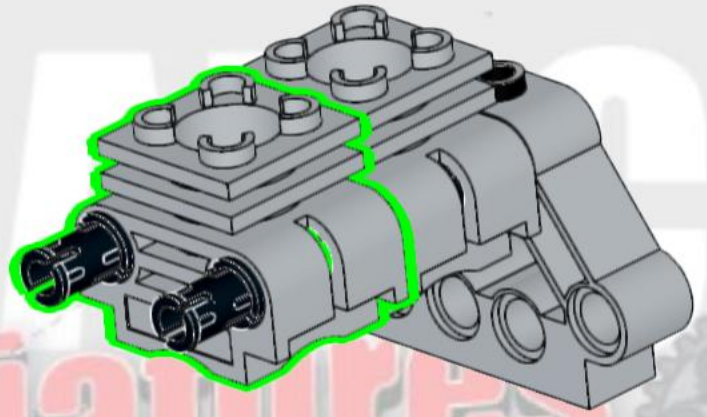

MECHANICAL
Miniatures

17

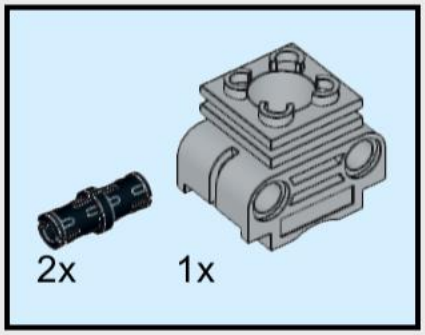

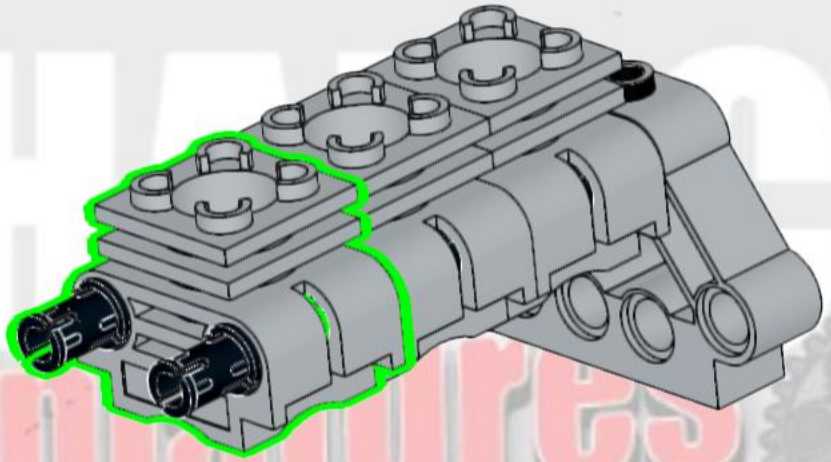

MECHANICAL Miniatures

18

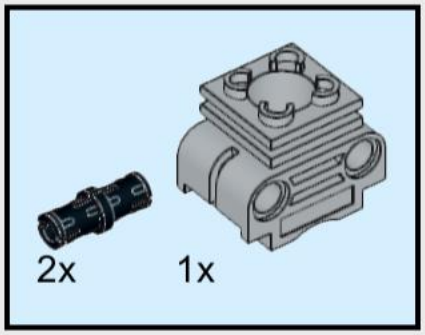

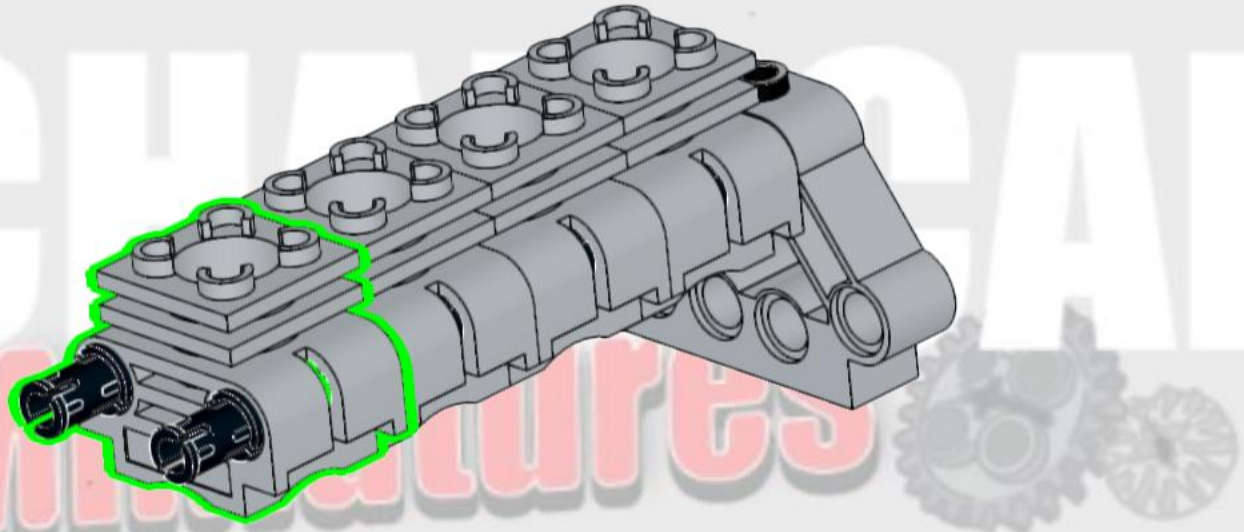

MECHANICAL Miniatures

19

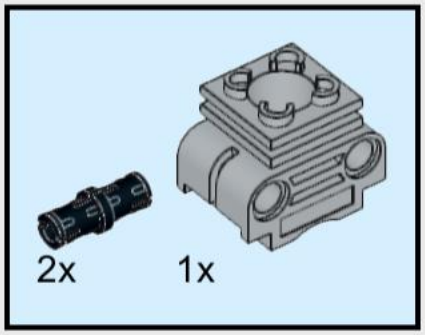

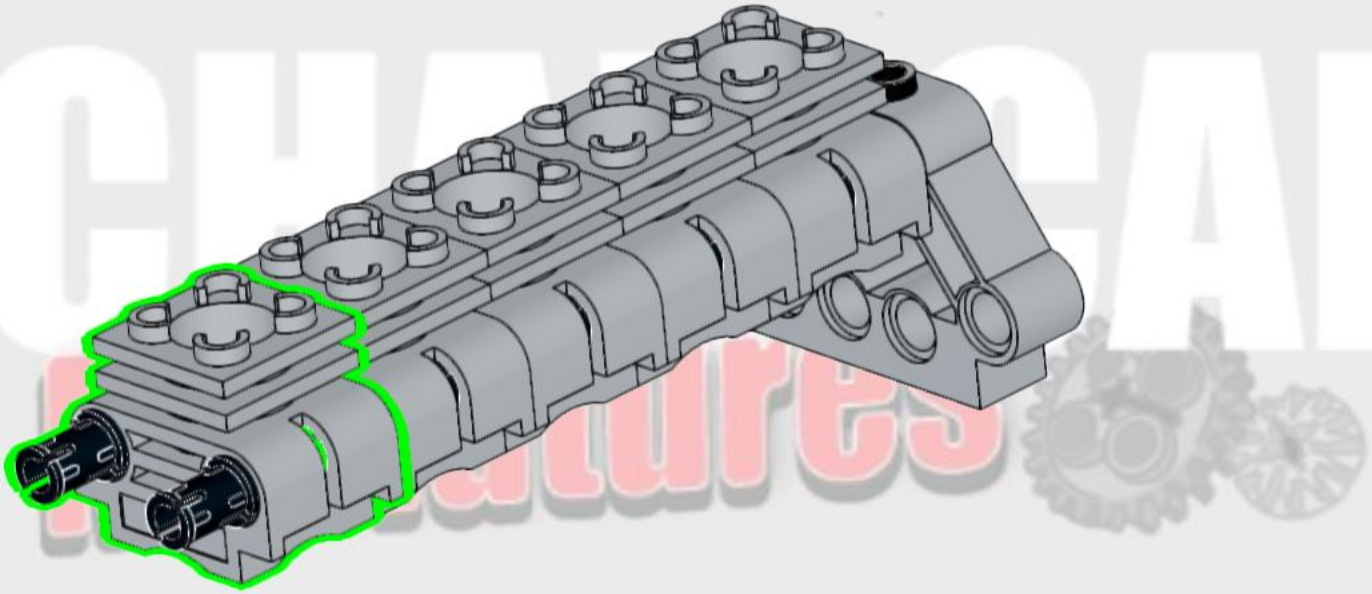

20

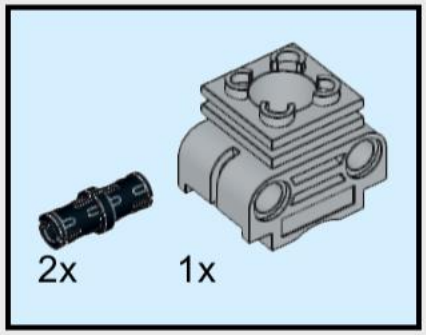

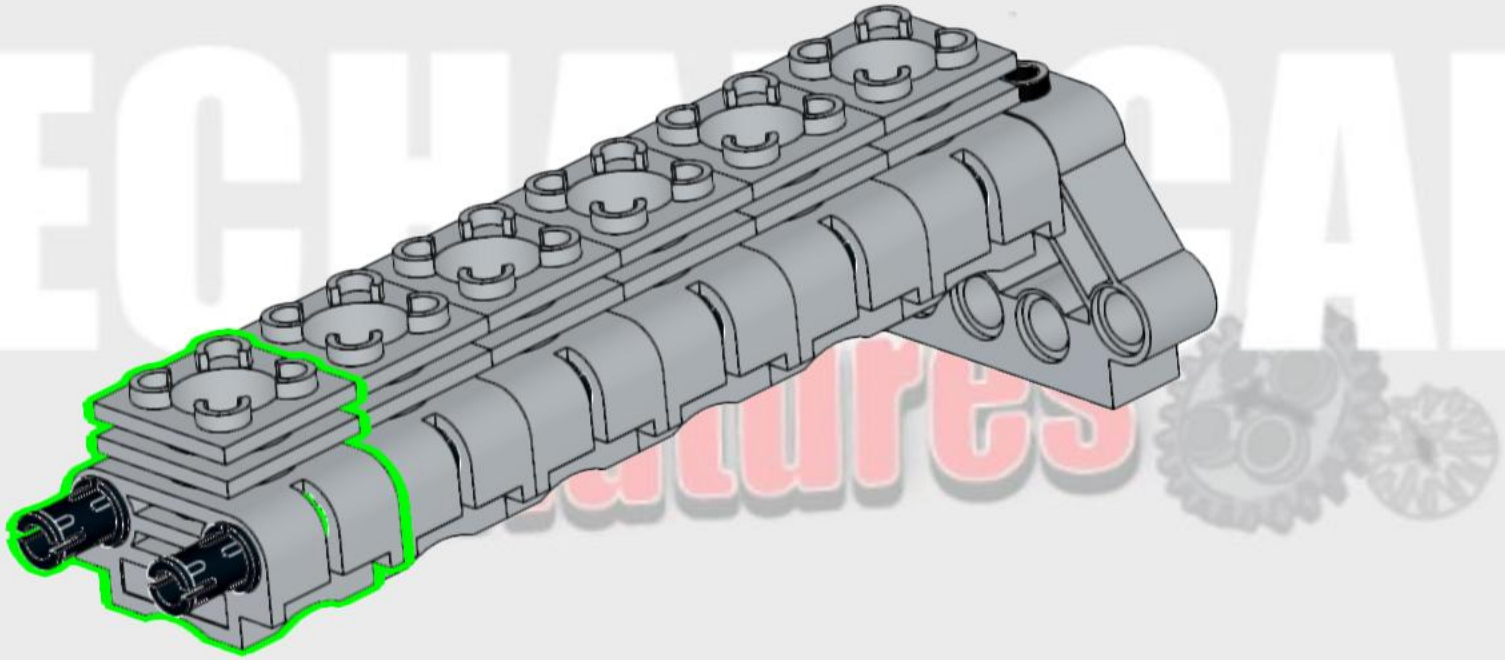

21

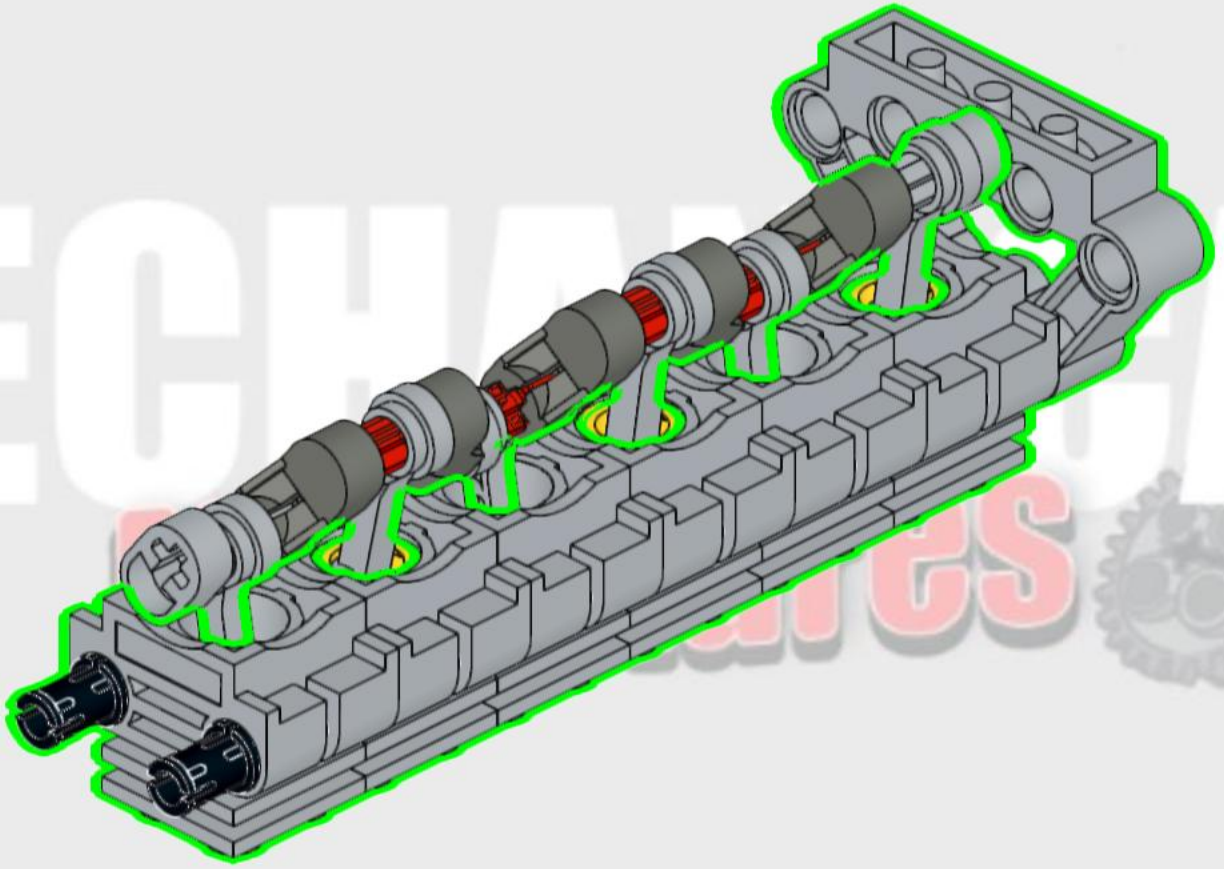

ALIGN PISTONS TO BORES AND INSTALL

22

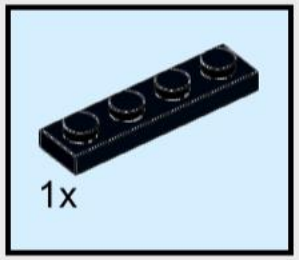

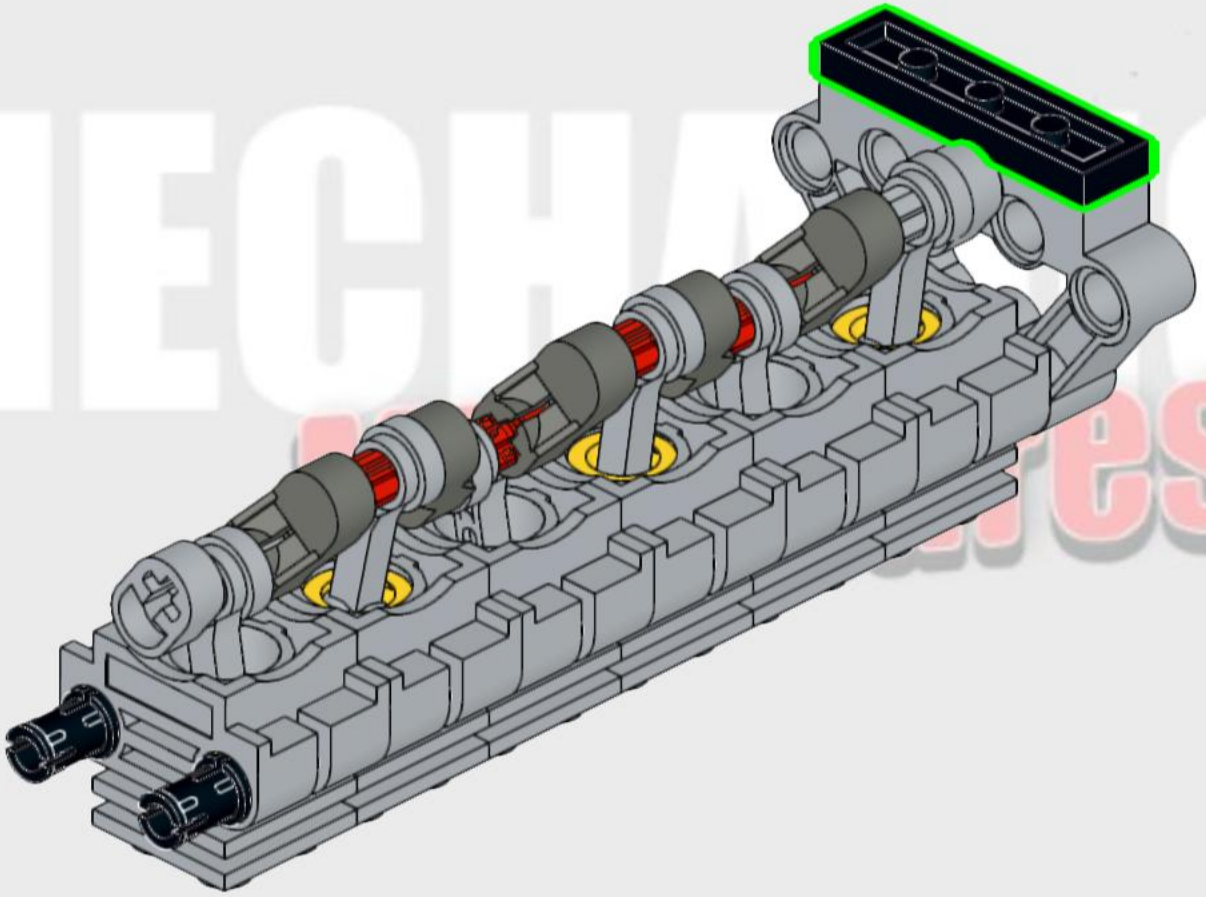

23

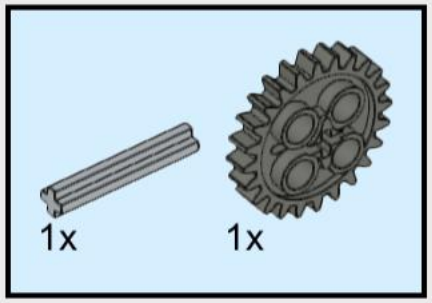

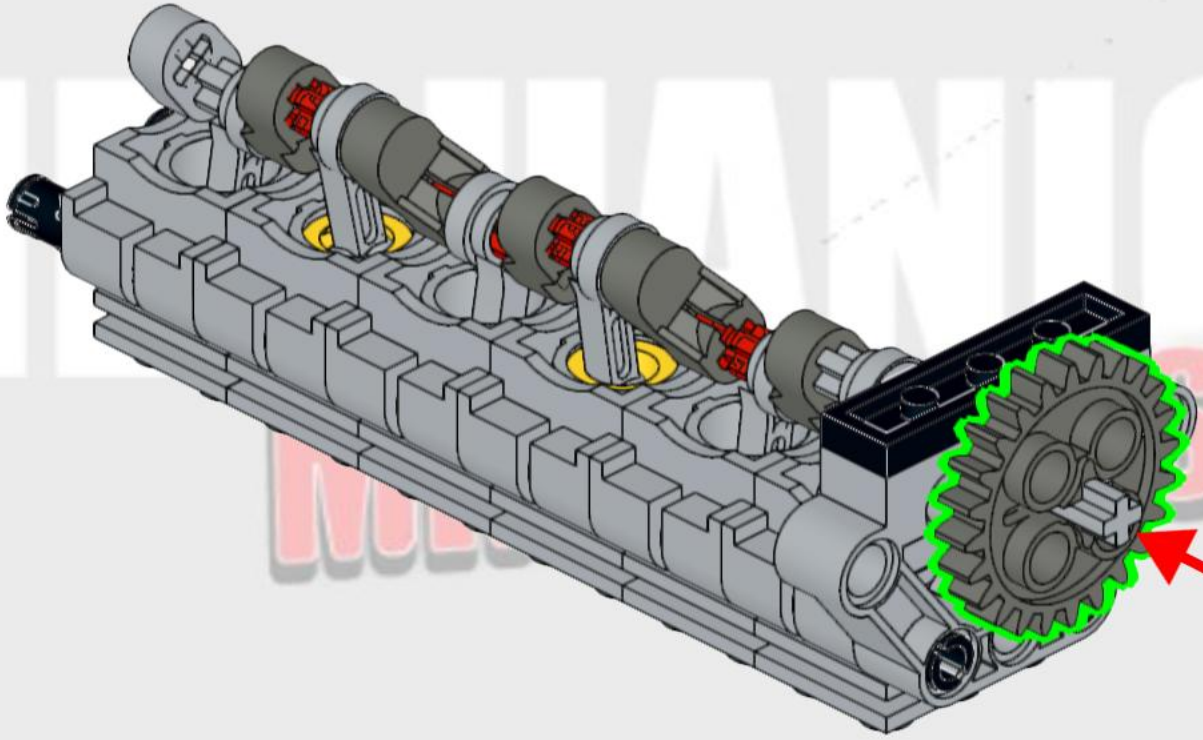

ENSURE AXLE ENGAGES WITH CRANK

3 1:1

24

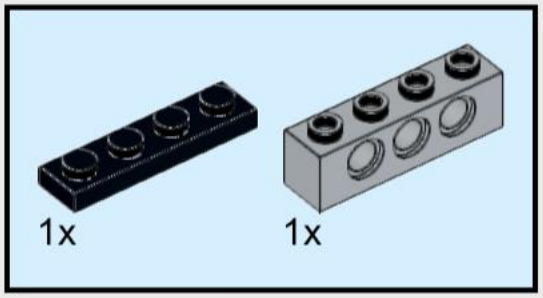

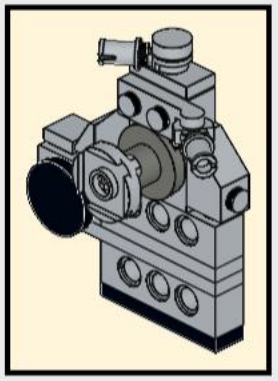

MECHANICAL
Miniatures

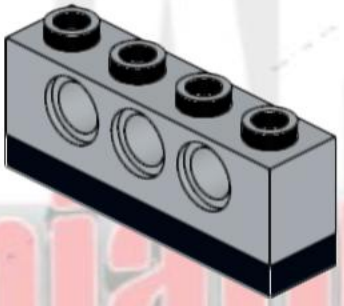

25

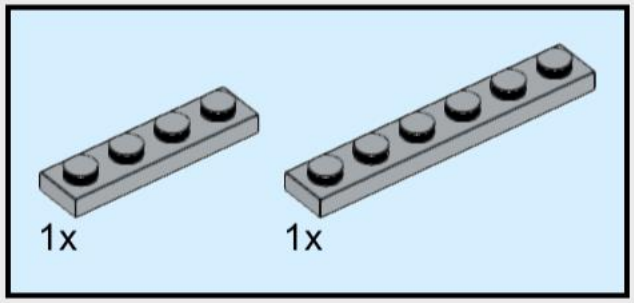

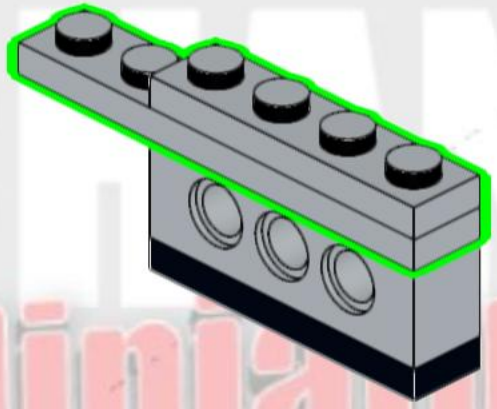

MECHANICAL Miniatures

26

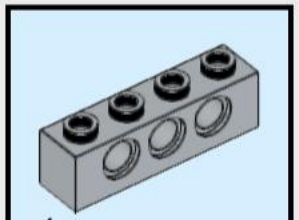

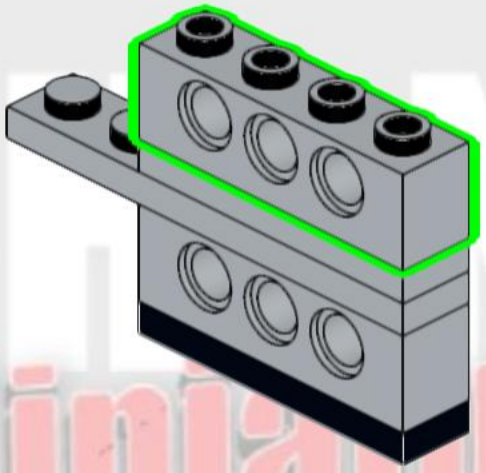

MECHANICAL Miniatures

27

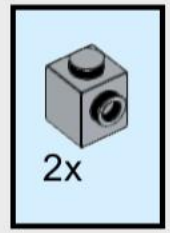

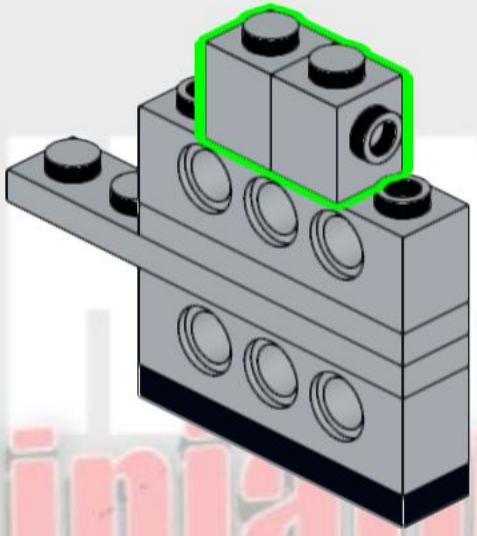

MECHANICAL
Miniatures

28

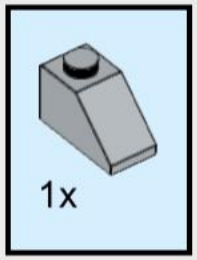

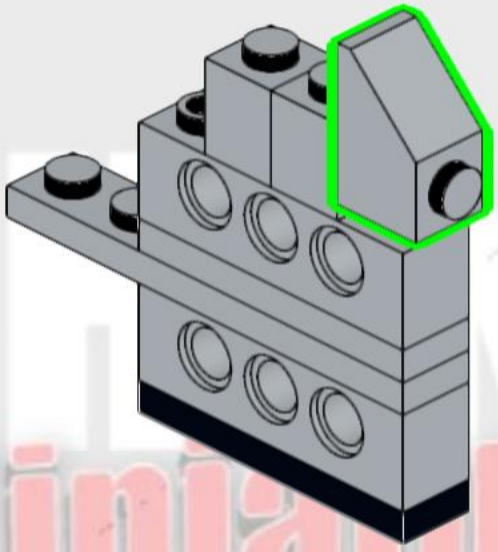

MECHANICAL Miniatures

29

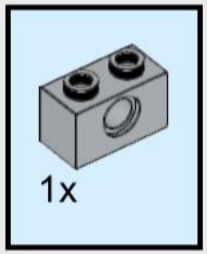

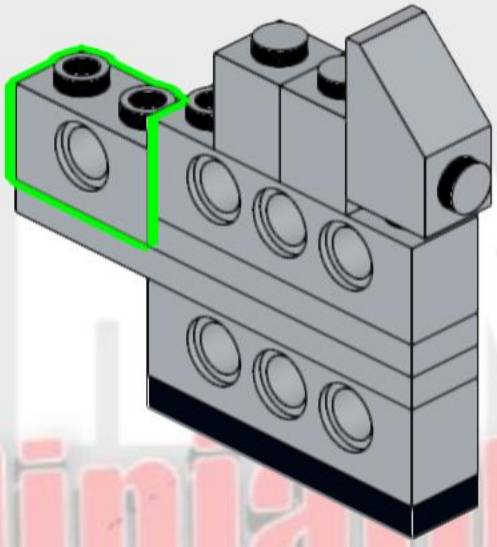

MECHANICAL
Miniatures

30

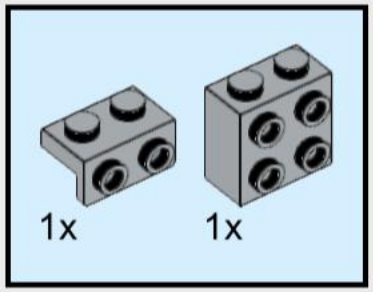

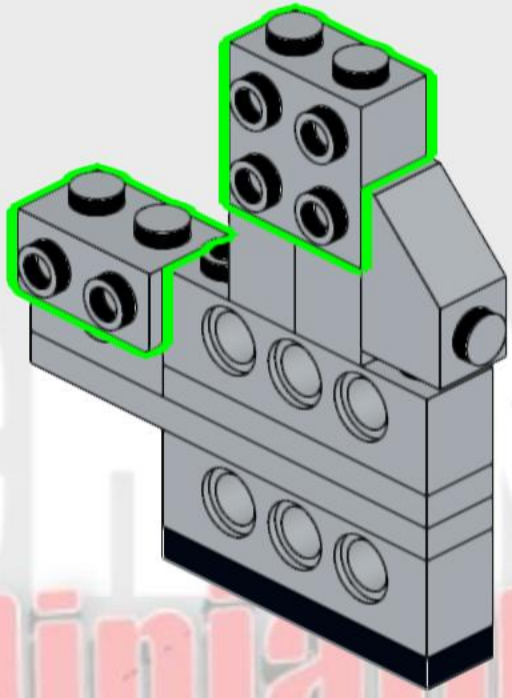

MECHANICAL
Miniatures

31

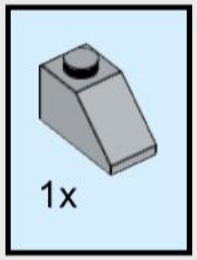

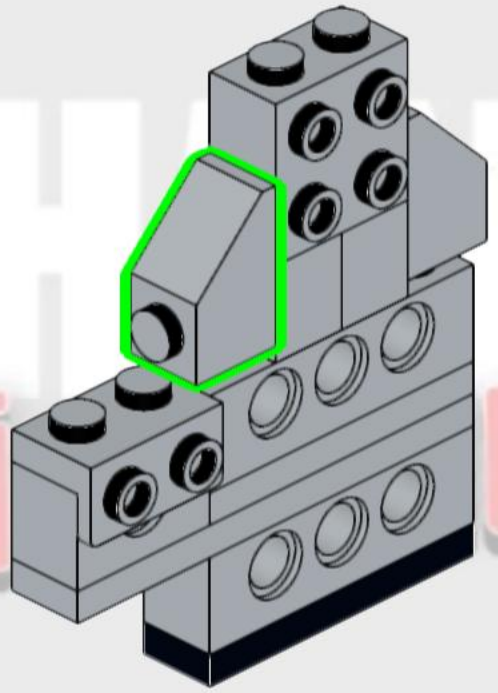

32

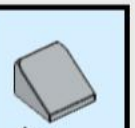

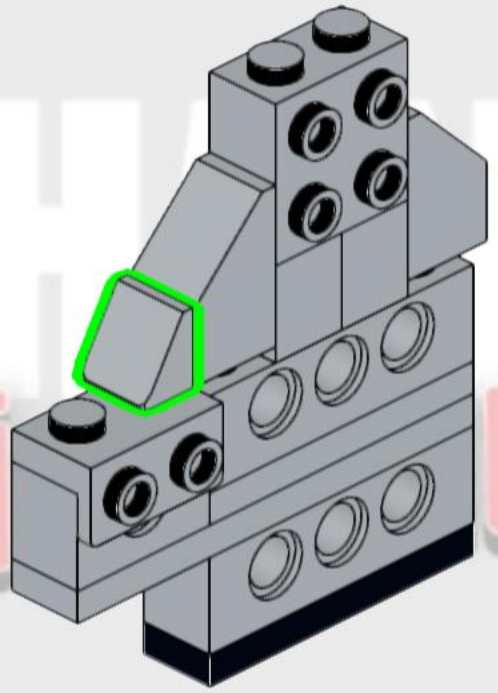

33

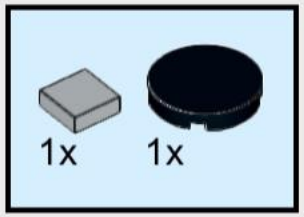

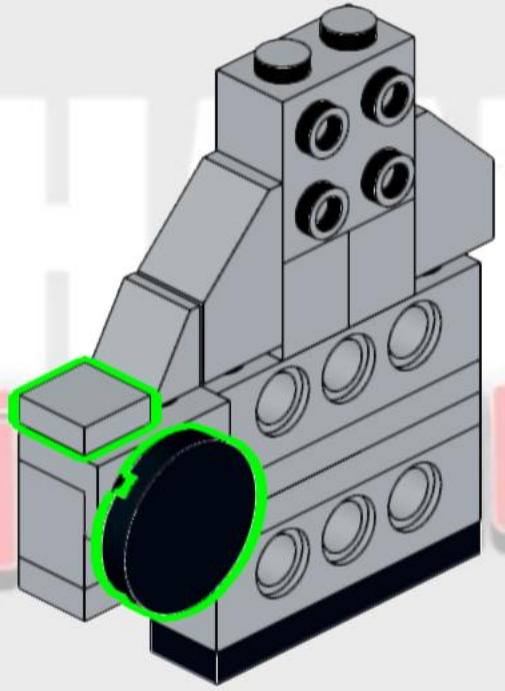

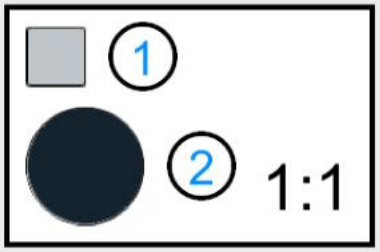

34

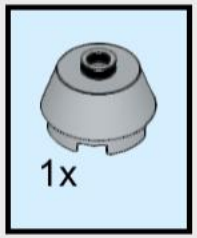

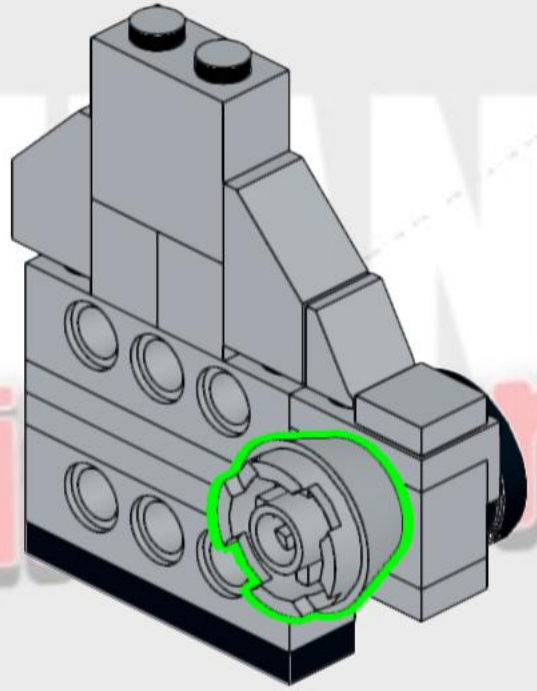

35

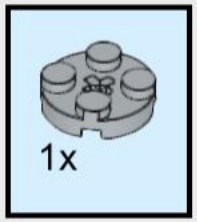

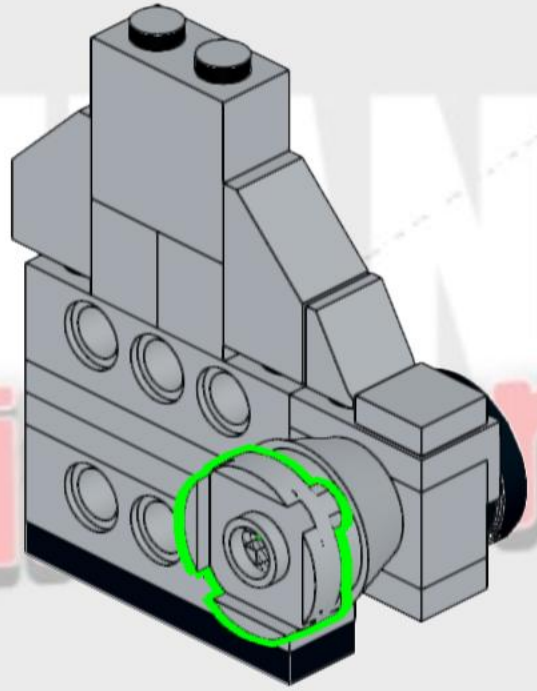

36

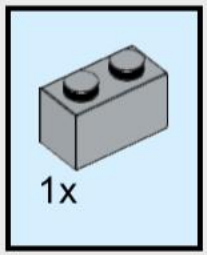

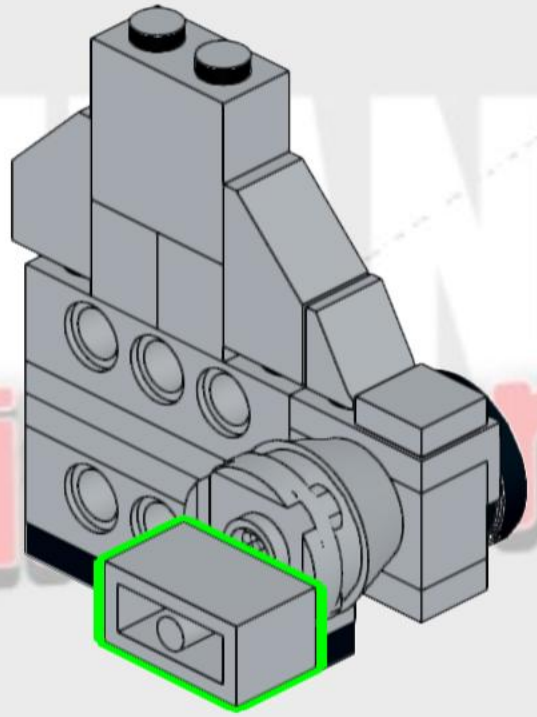

37

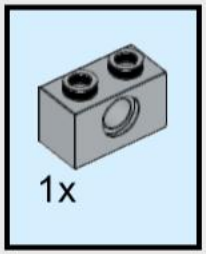

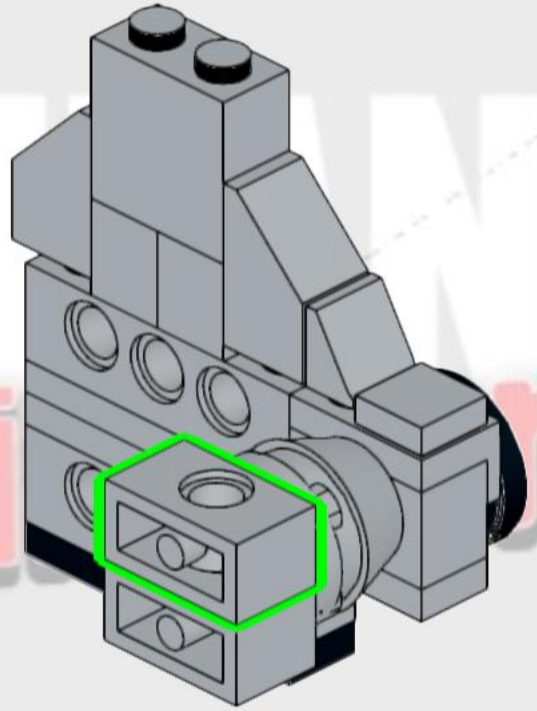

38



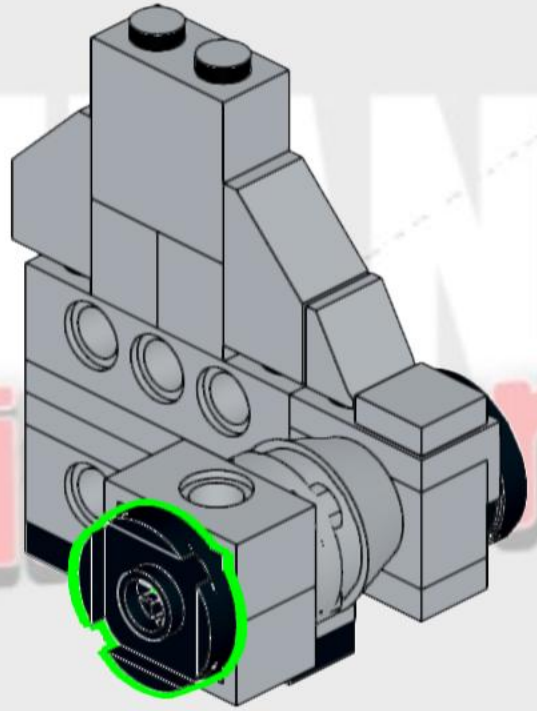

39

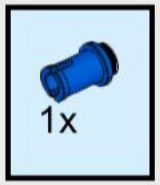

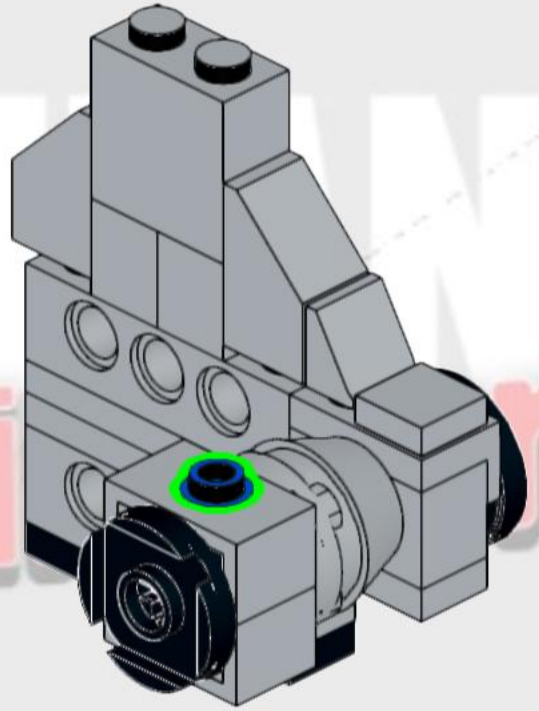

40

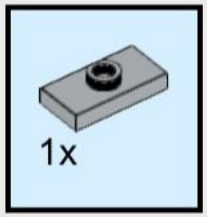

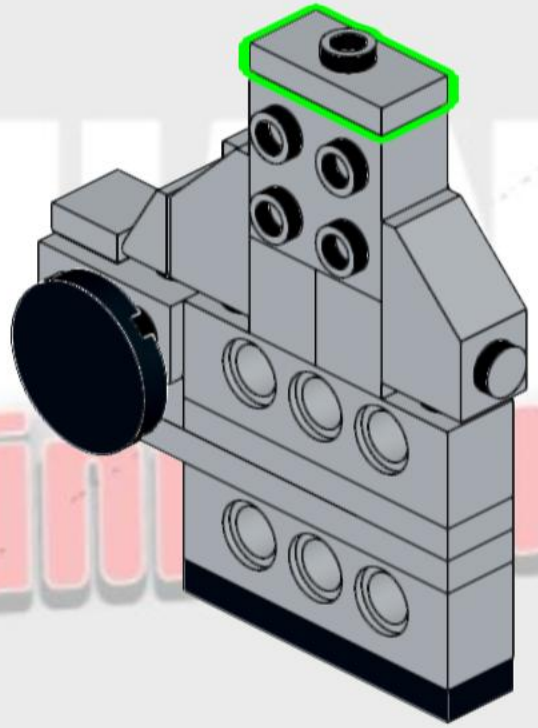

41

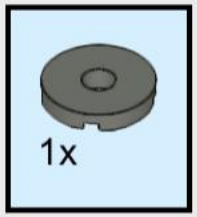

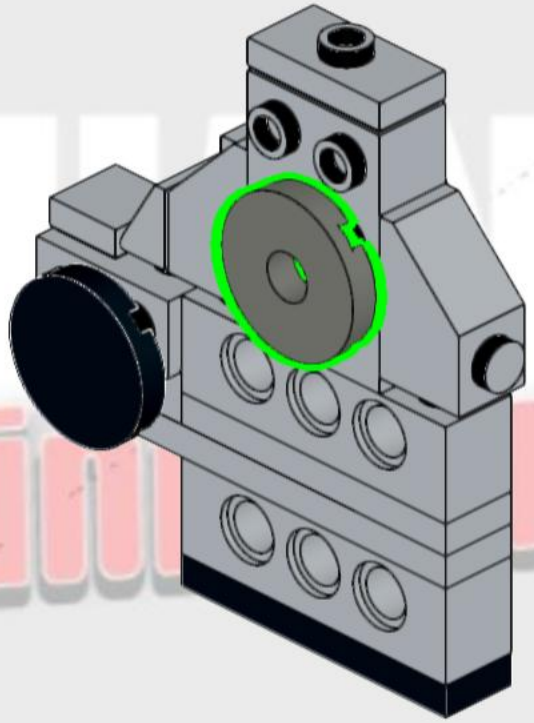

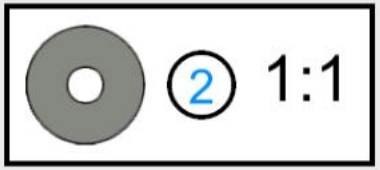

42



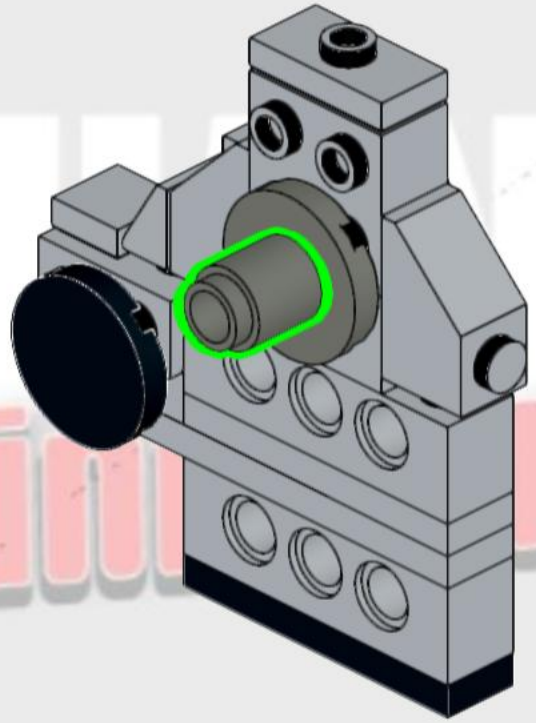

43

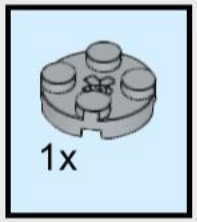

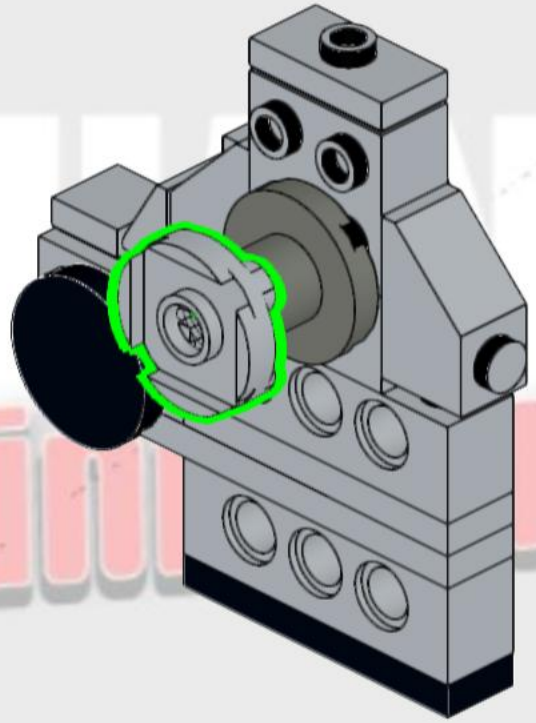

44

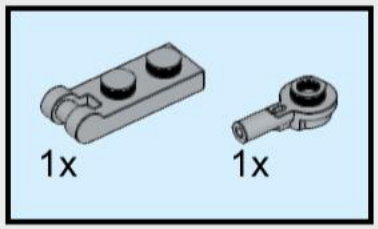

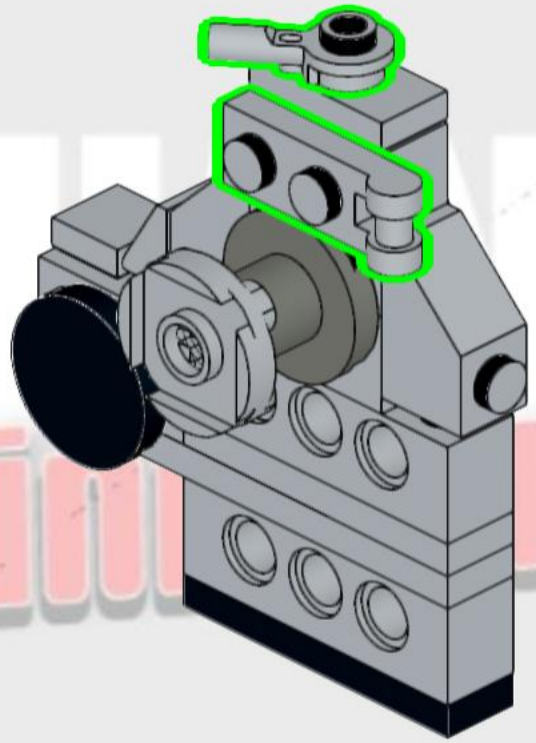

MECHANICAL
Mini res

45

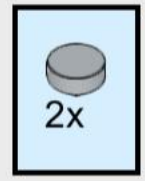

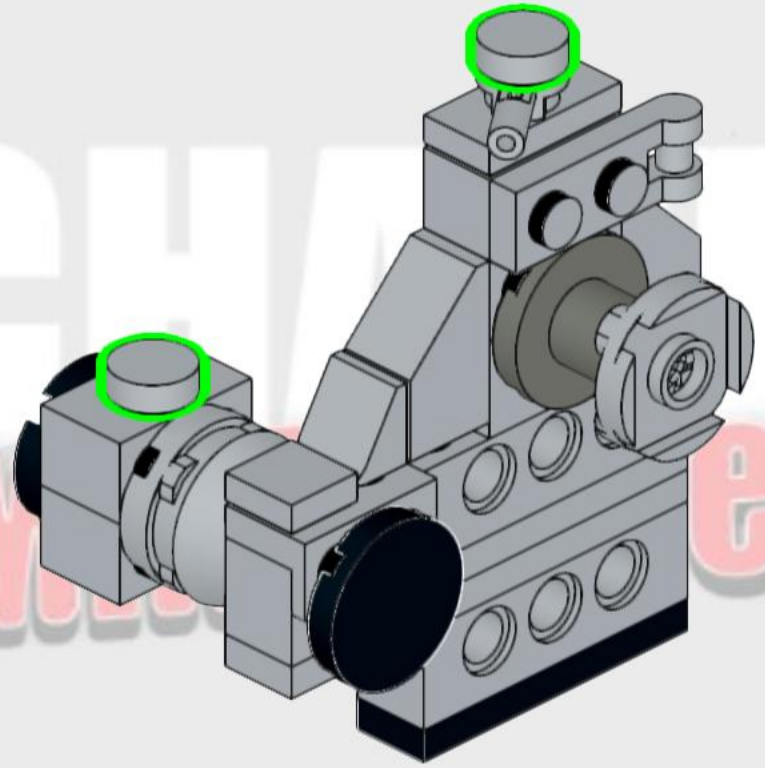

MECHANICAL



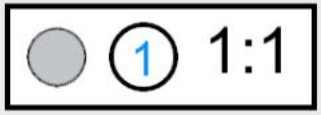

46

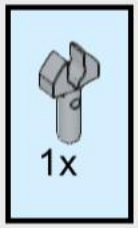

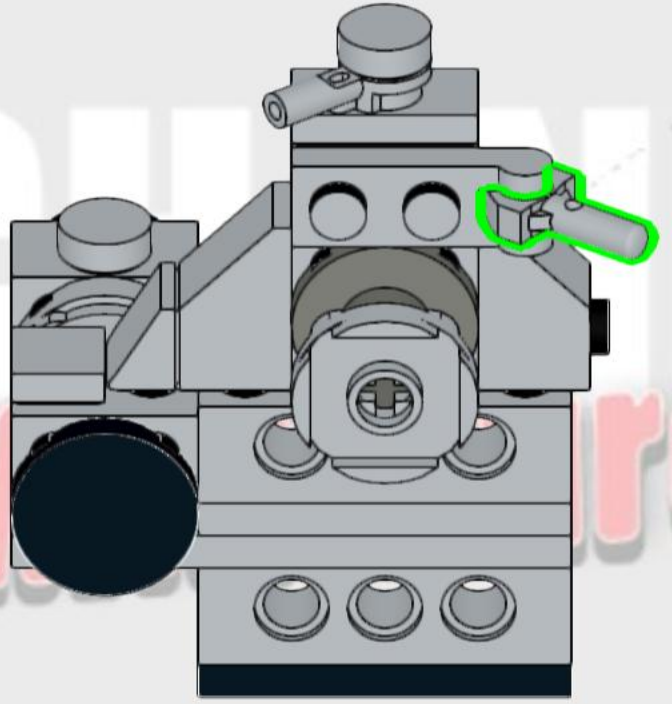

47

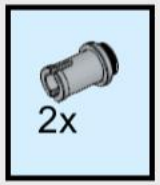

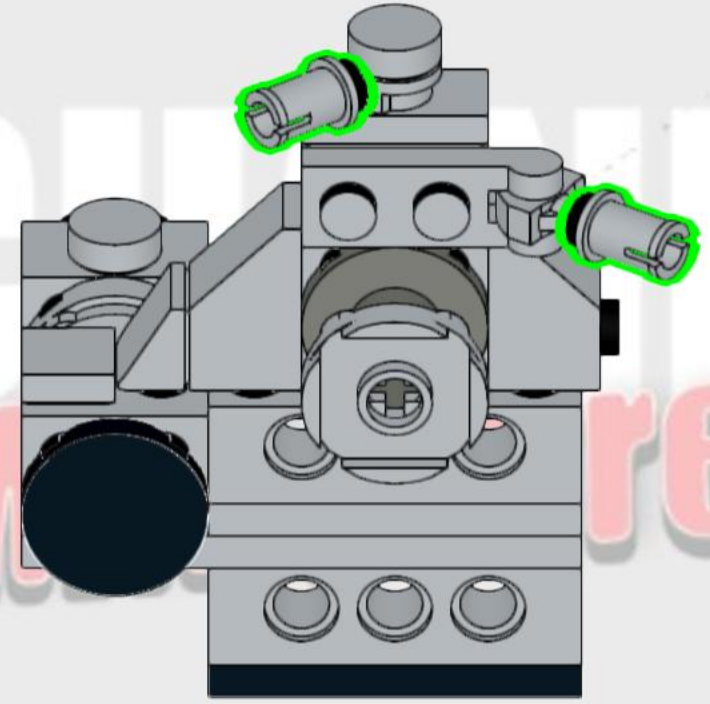

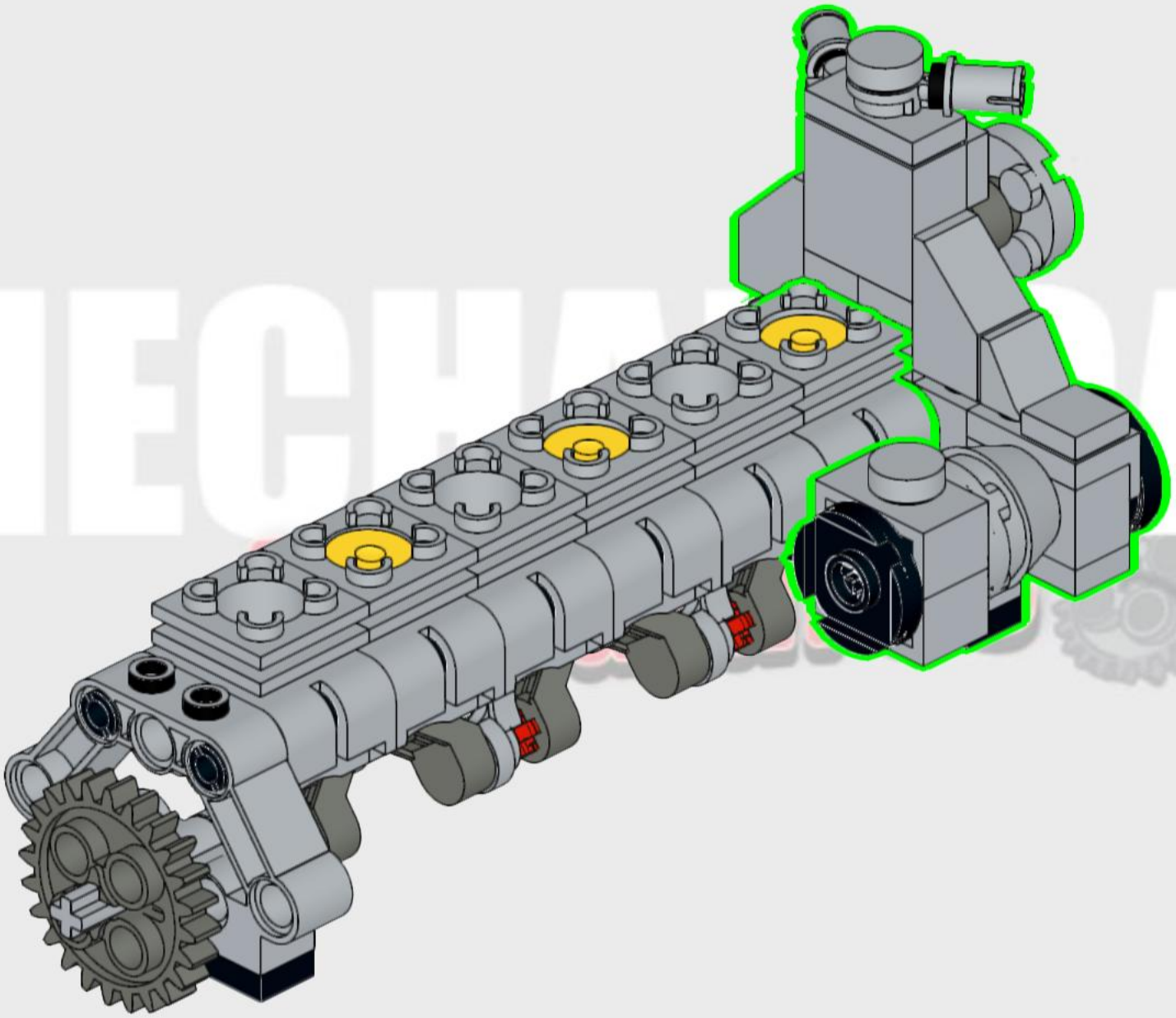

49

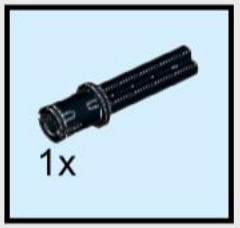



MECHANICAL
Miniatures

50



MECHANICAL
Miniatures



51



MECHANICAL
Miniatures



52

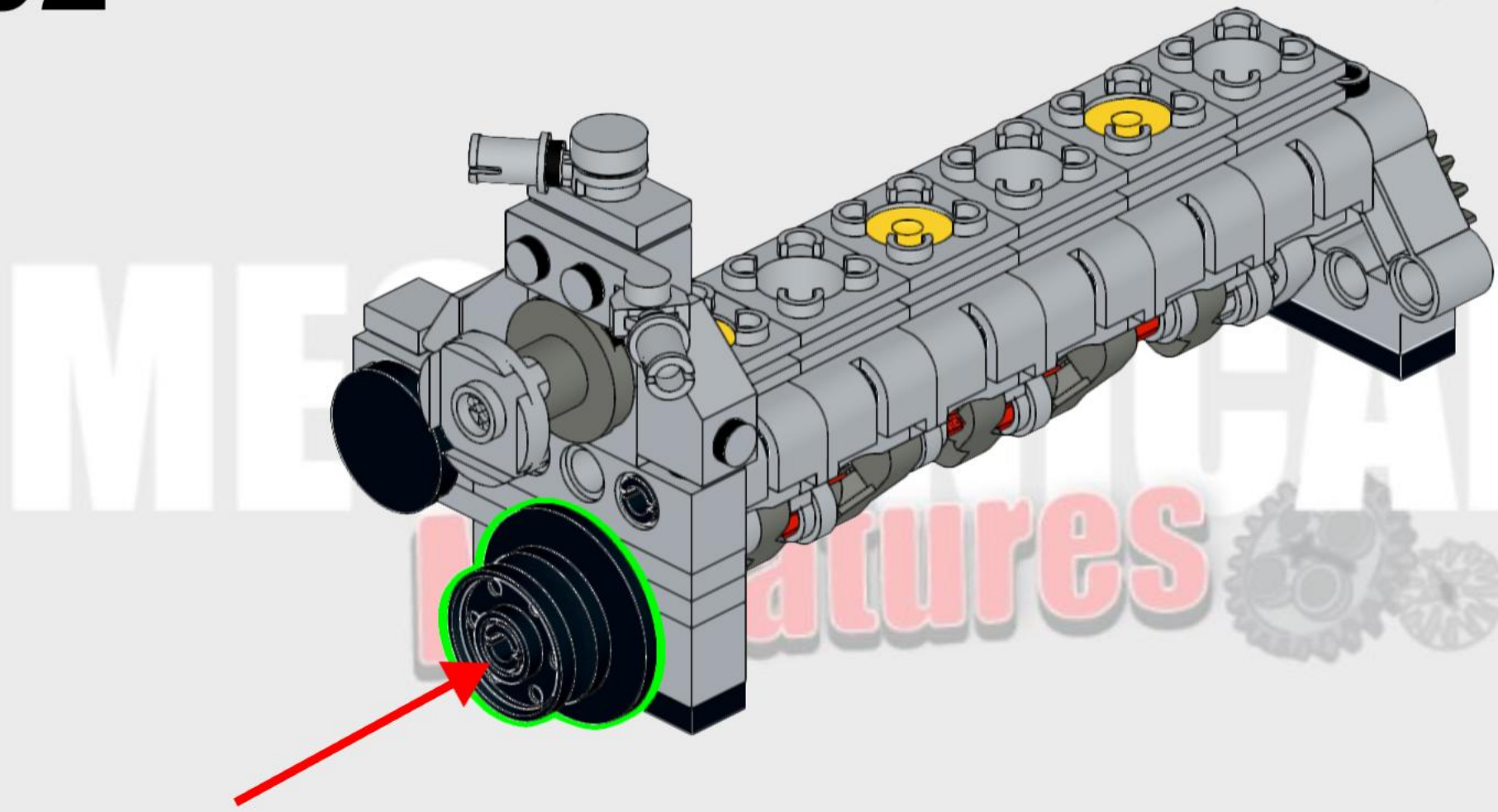

ENSURE AXLE ENGAGES WITH CRANK

53

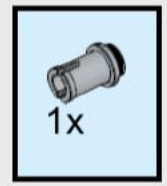

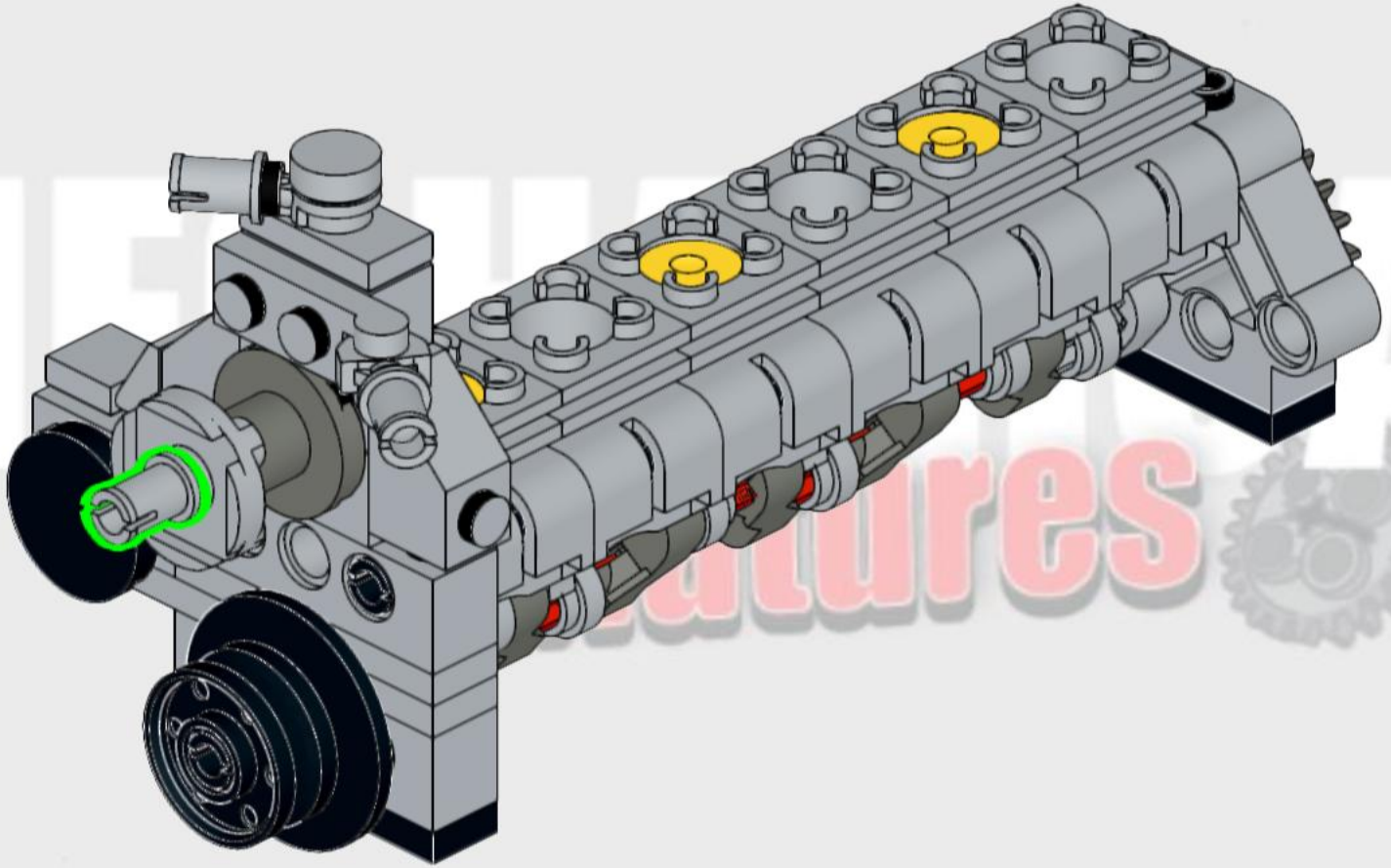

54

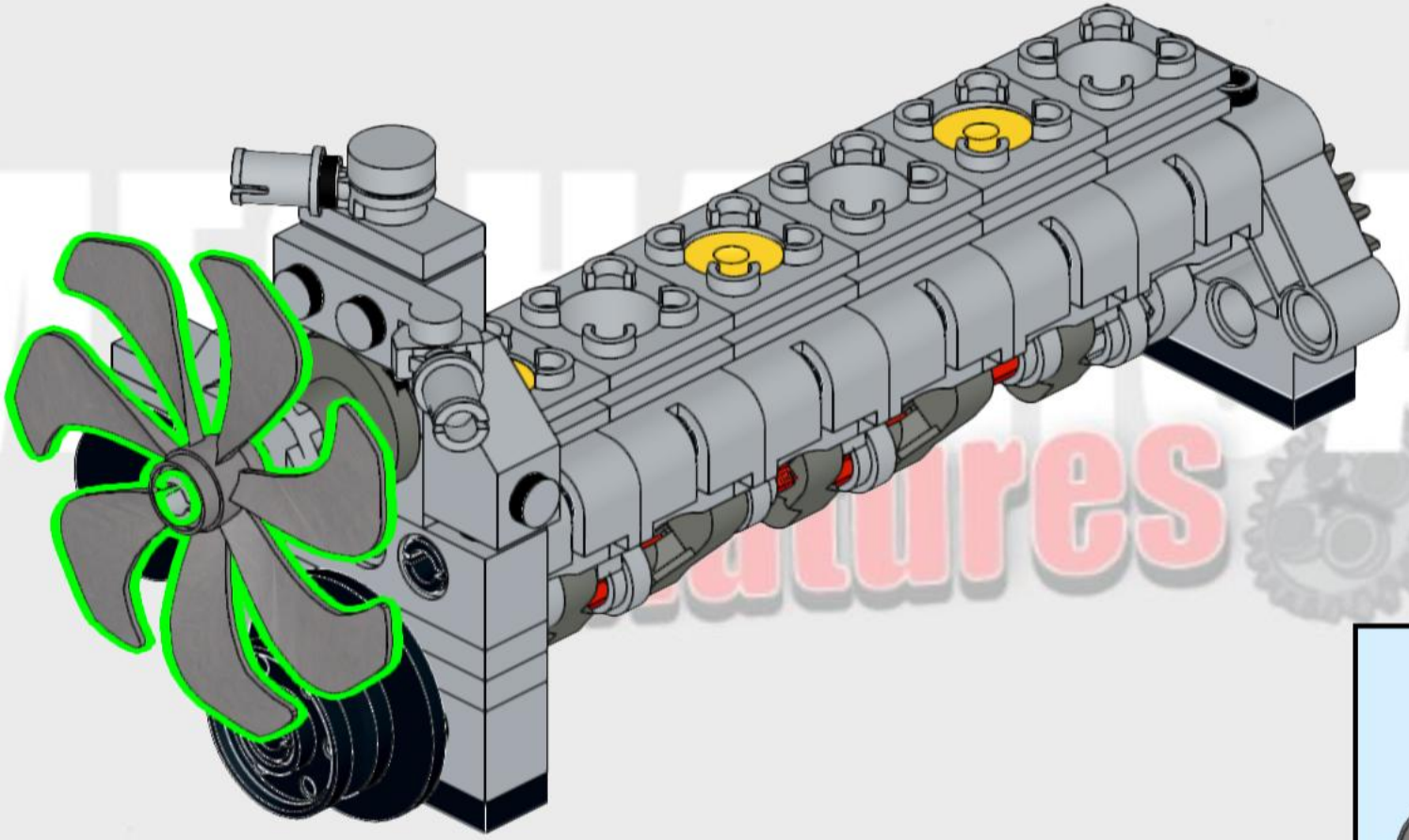

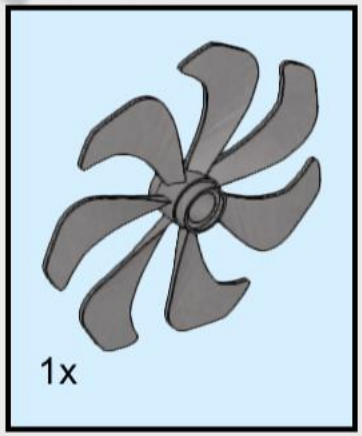

55

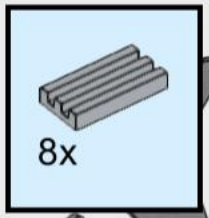

56

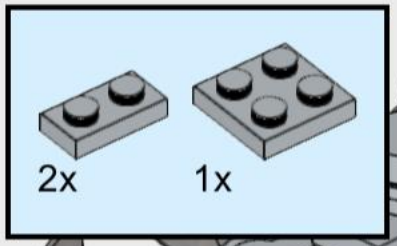

57

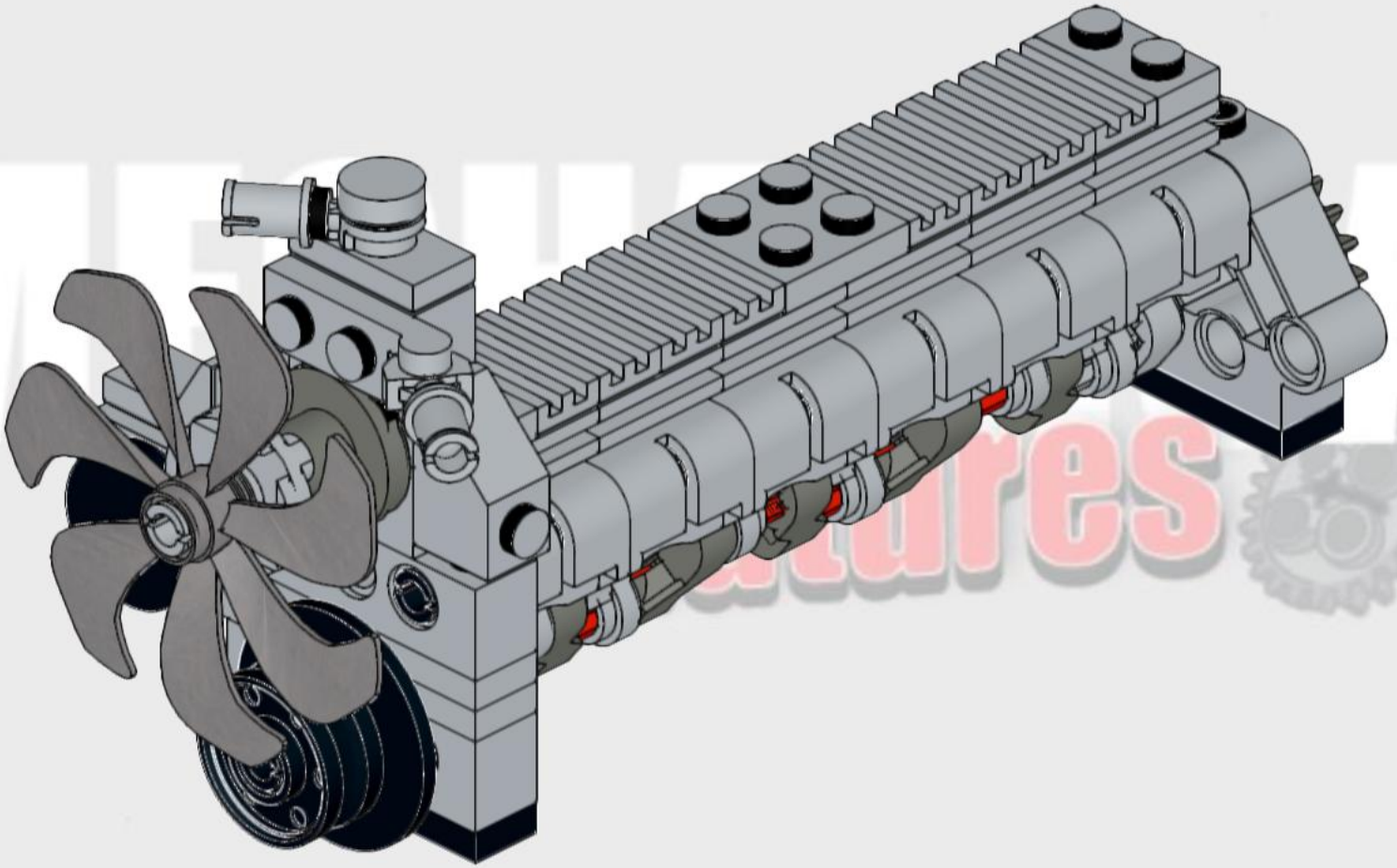

SHORT BLOCK COMPLETE

58

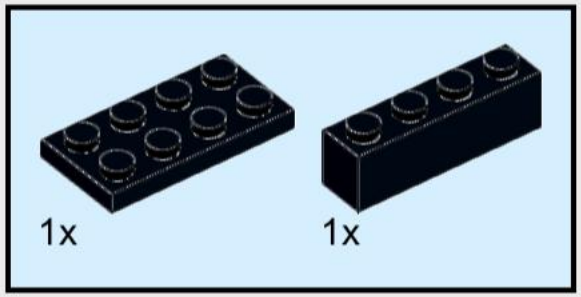

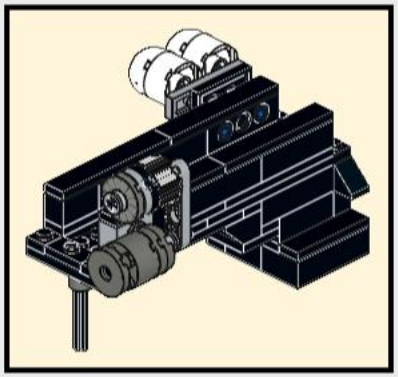

MECHANICAL
Miniatures



59

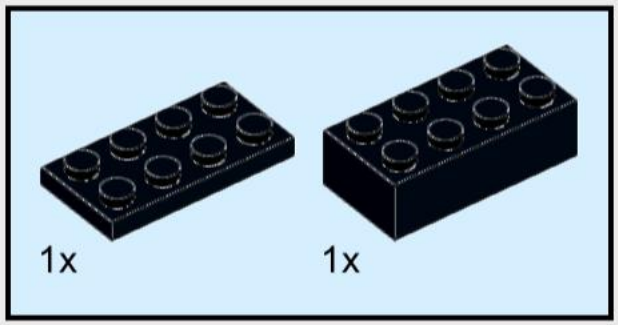

MECHANICAL
Miniatures

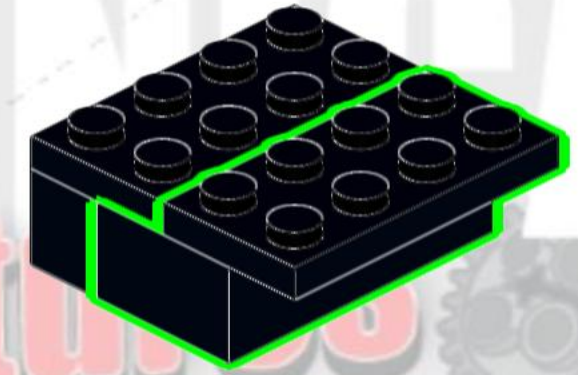

60

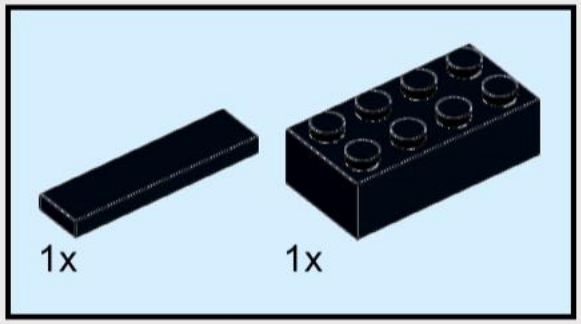

MECHANICAL
Miniatu

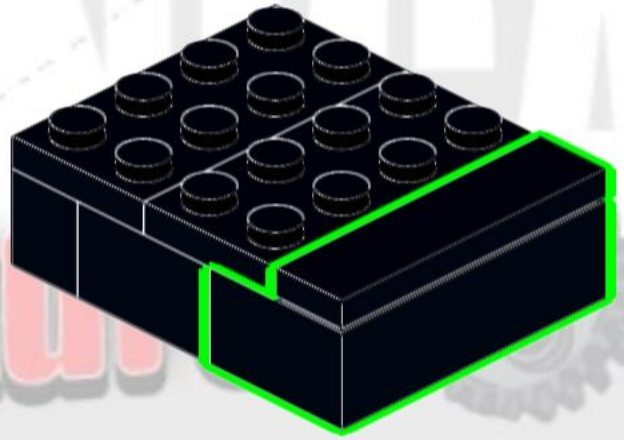



61

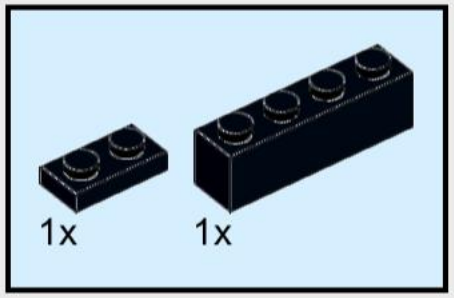



MECHANICAL
Miniatu

62

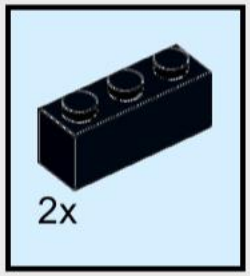

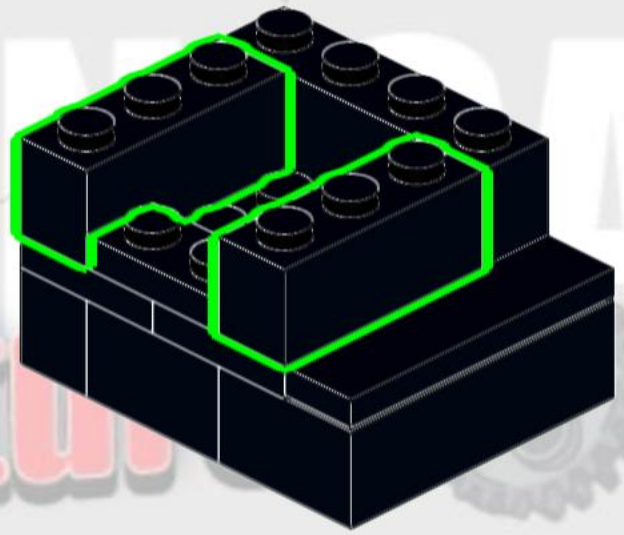

MECHANICAL
Miniatu

63

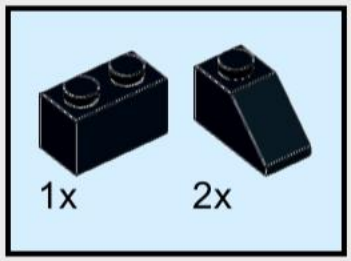



MECHANICAL
Miniatures

64

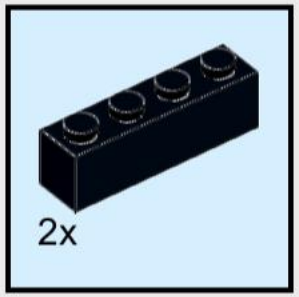

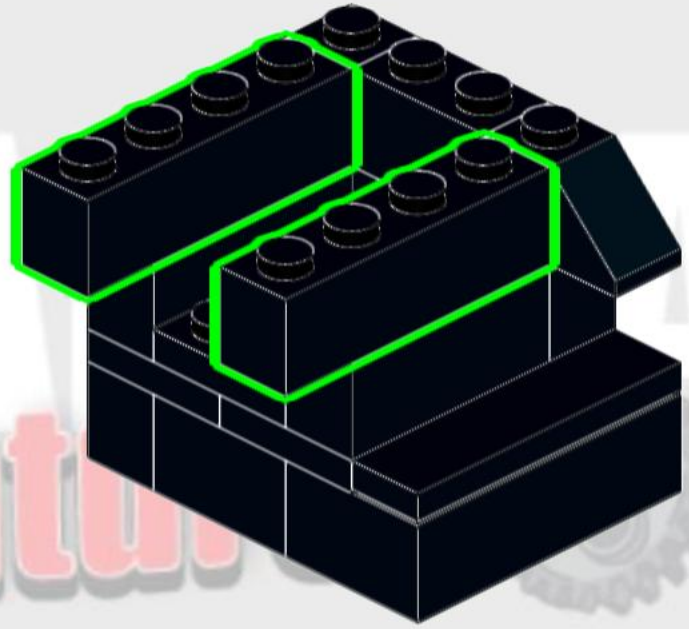

MECHANICAL
Miniatures

65

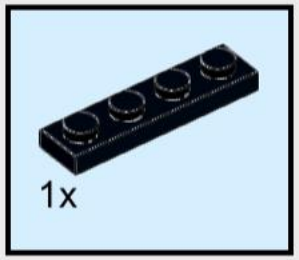

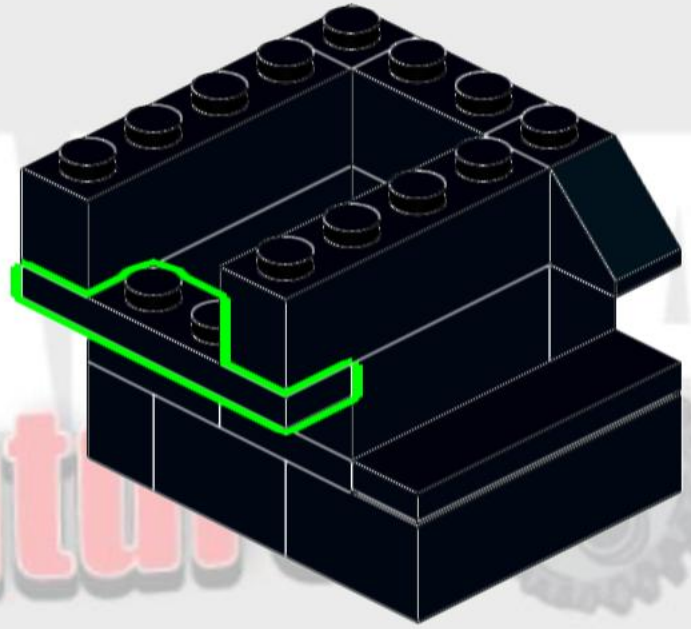

MECHANICAL
Miniatures

66

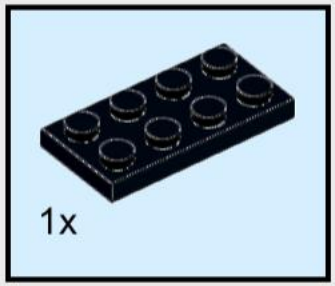

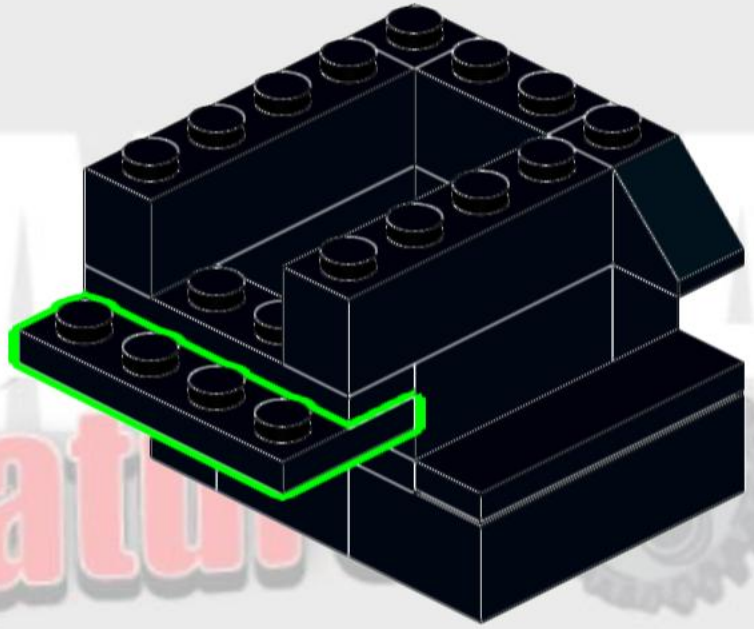

MECHANICAL
Miniatures

67

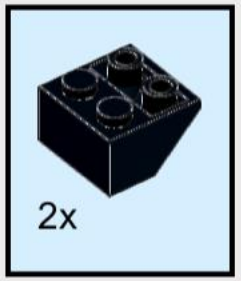

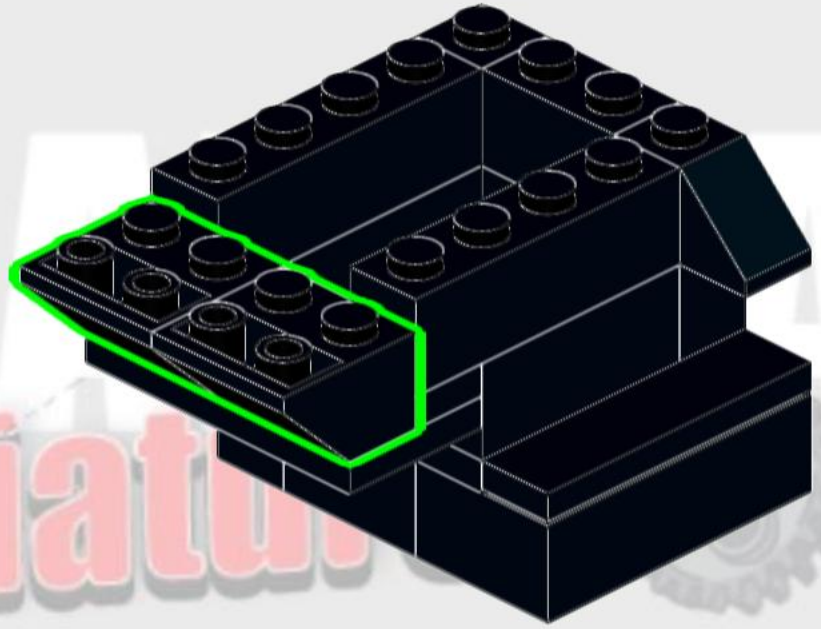

MECHANICAL
Miniatures

68

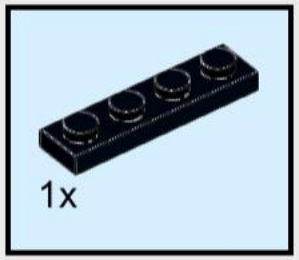

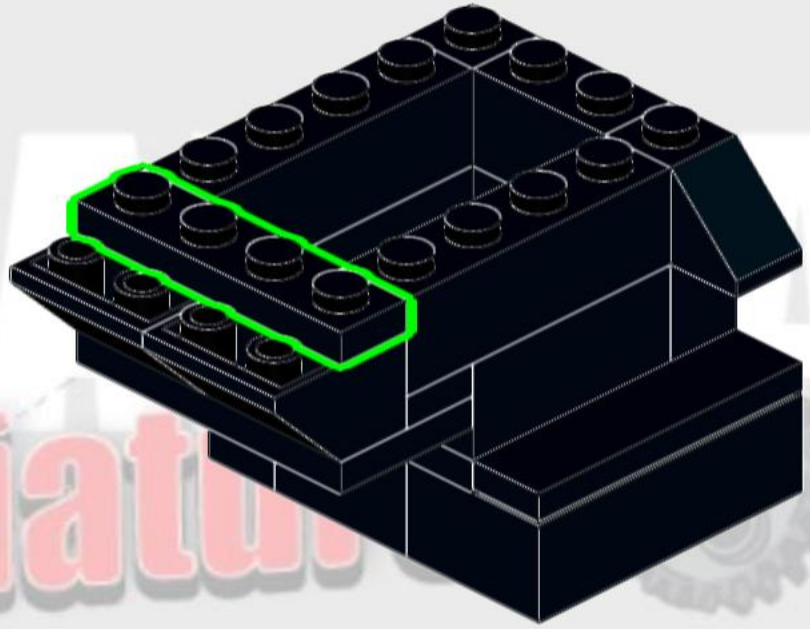

69

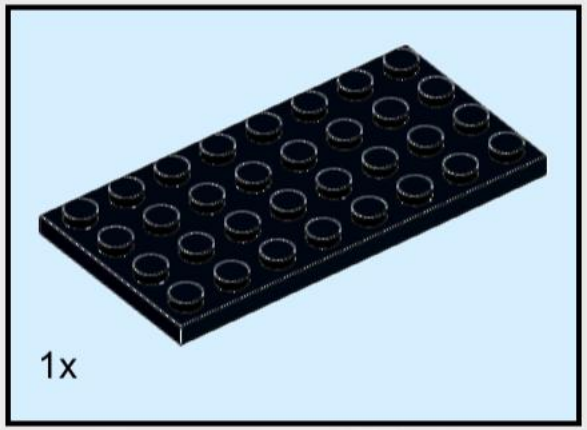

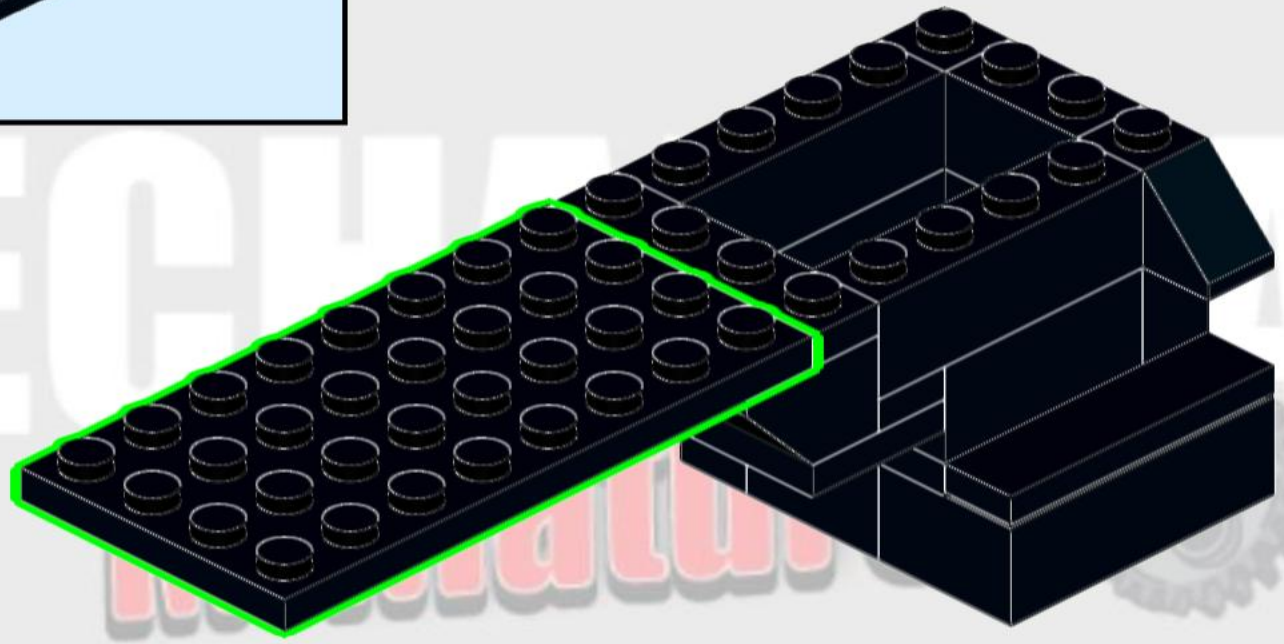

70

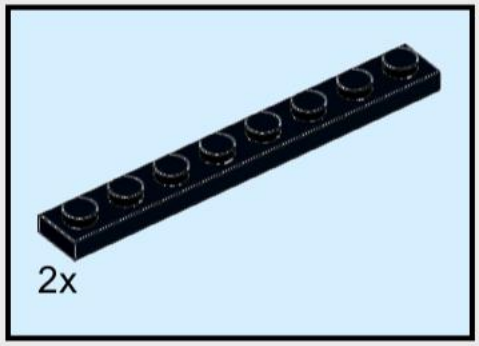

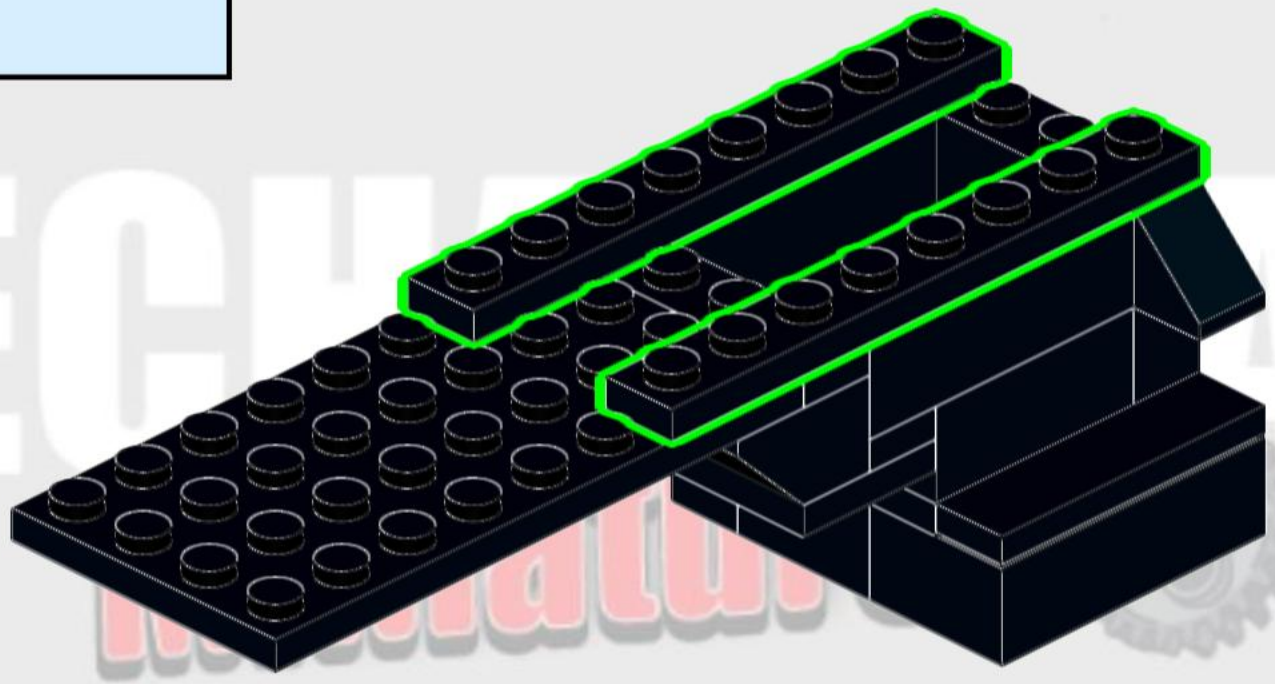

71

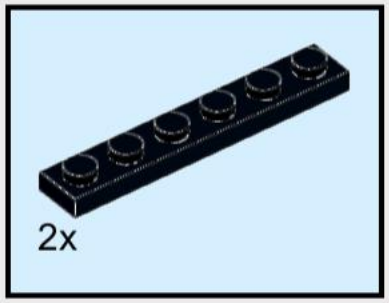

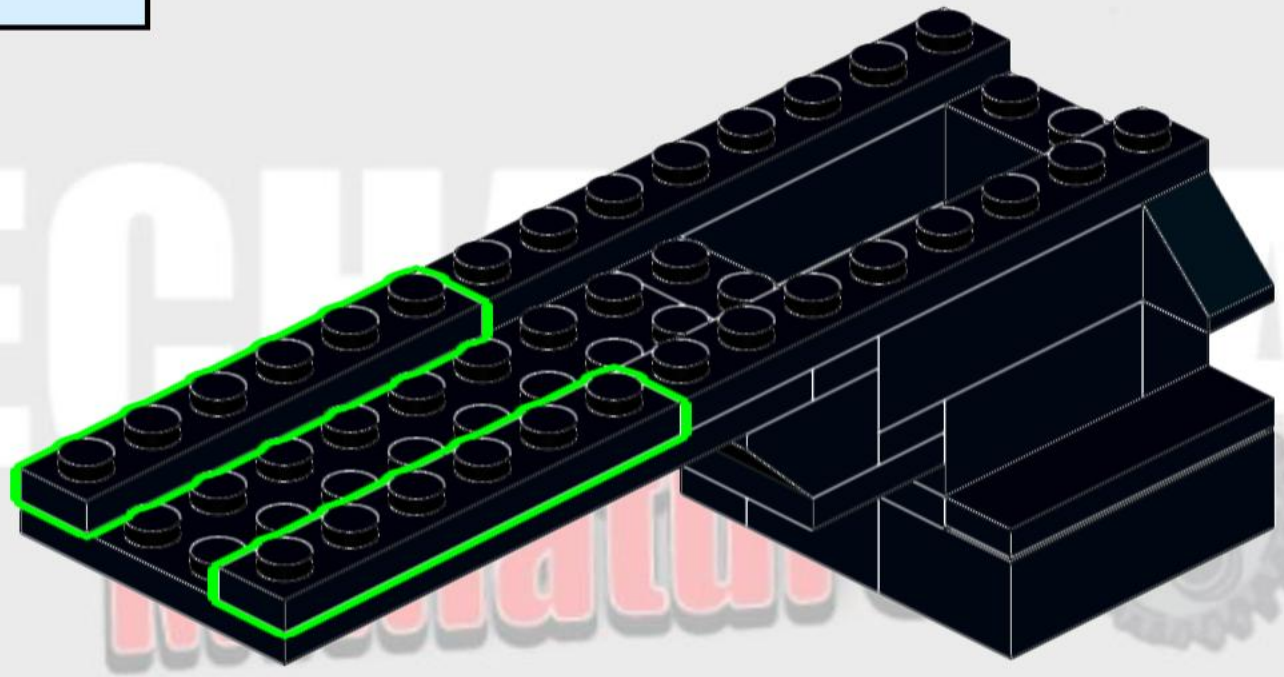

72

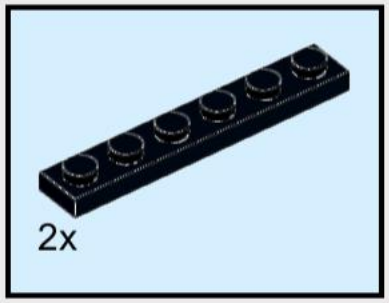

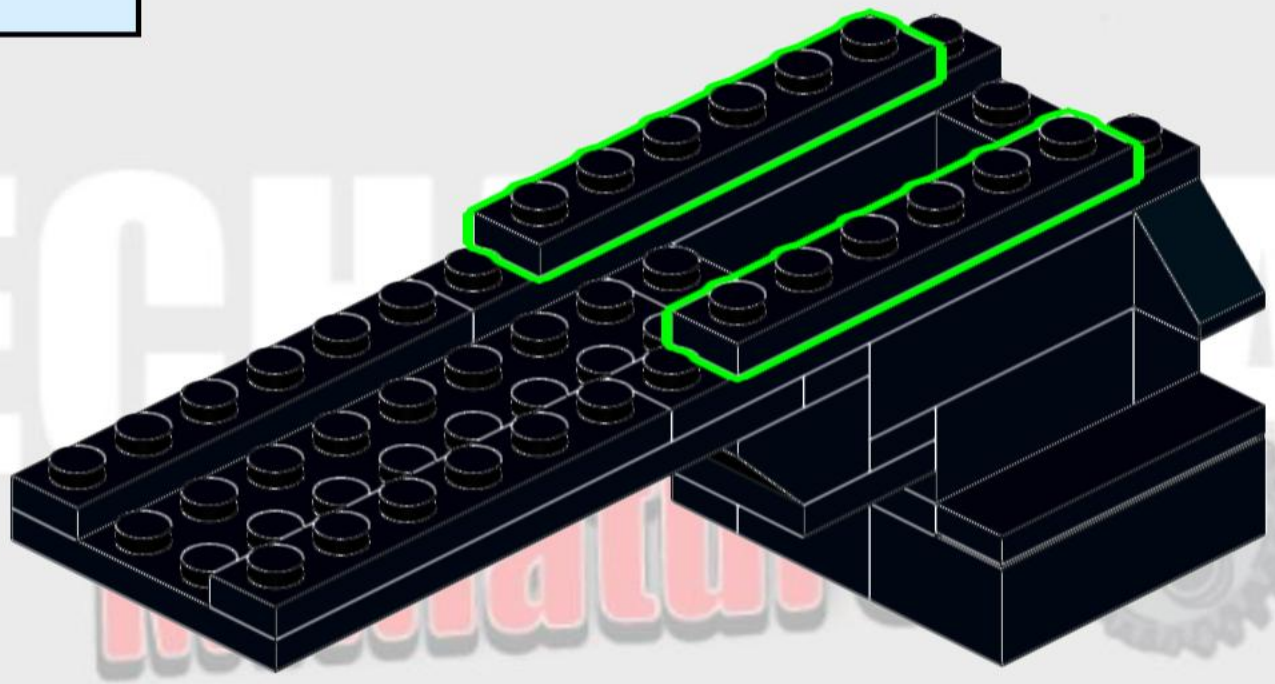

73

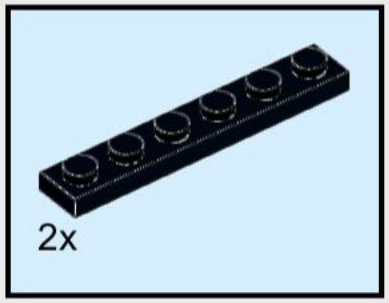

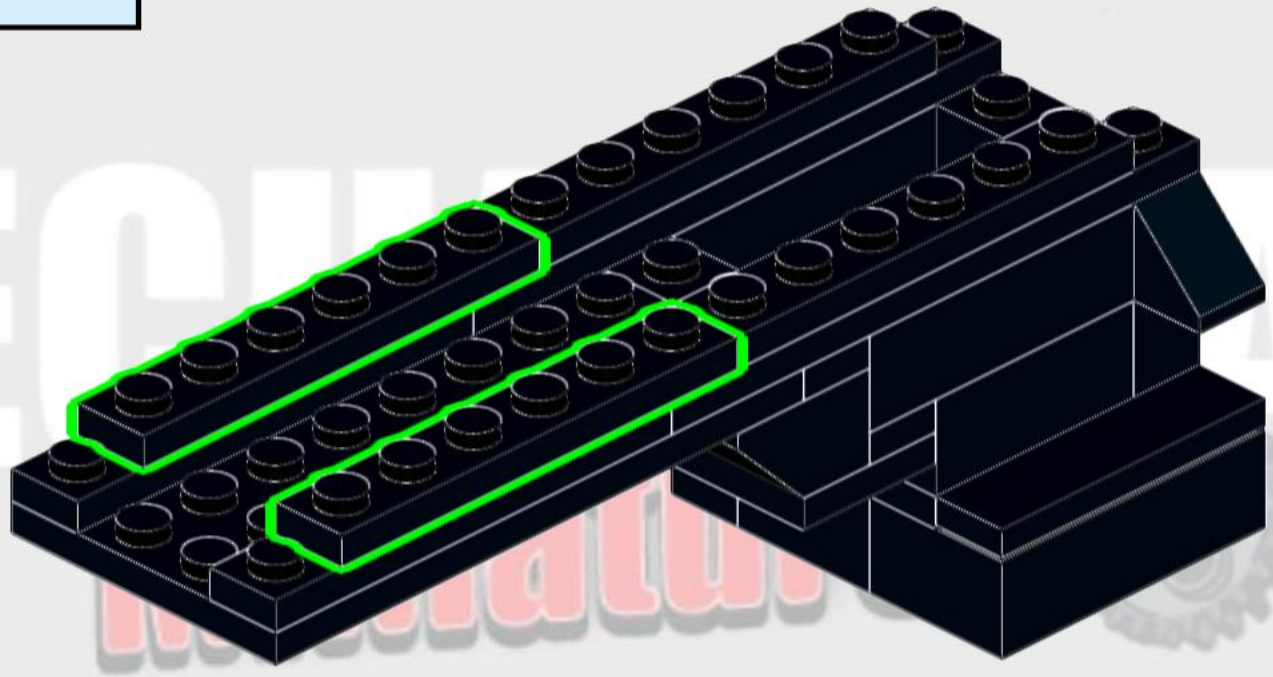

74



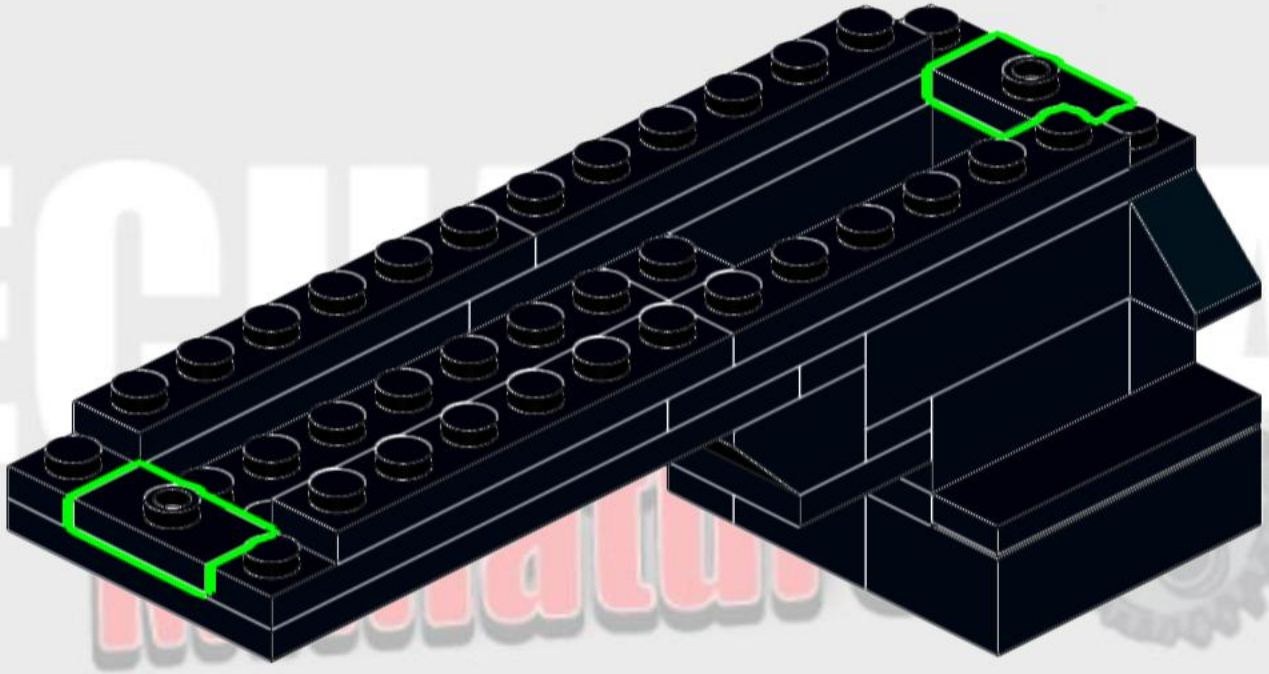

75

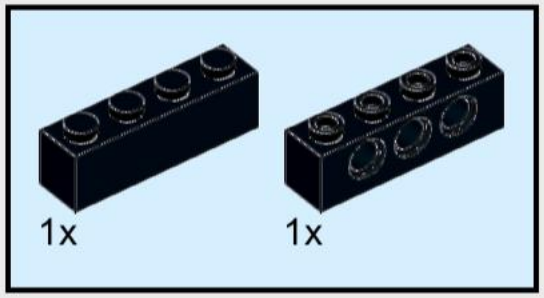

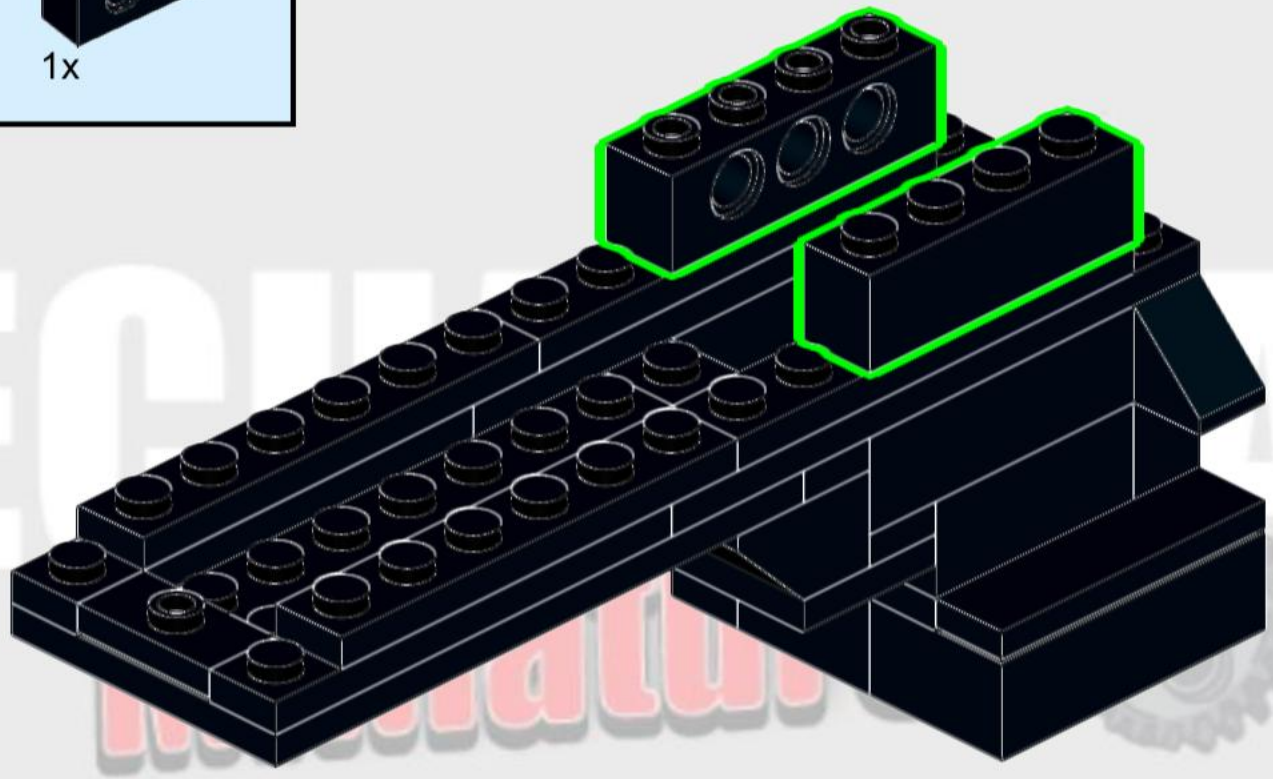

76

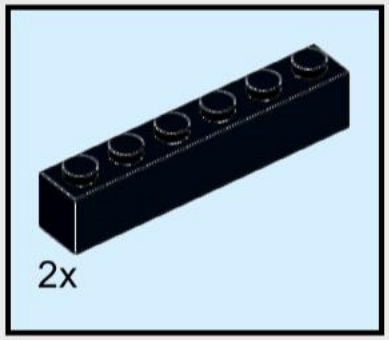

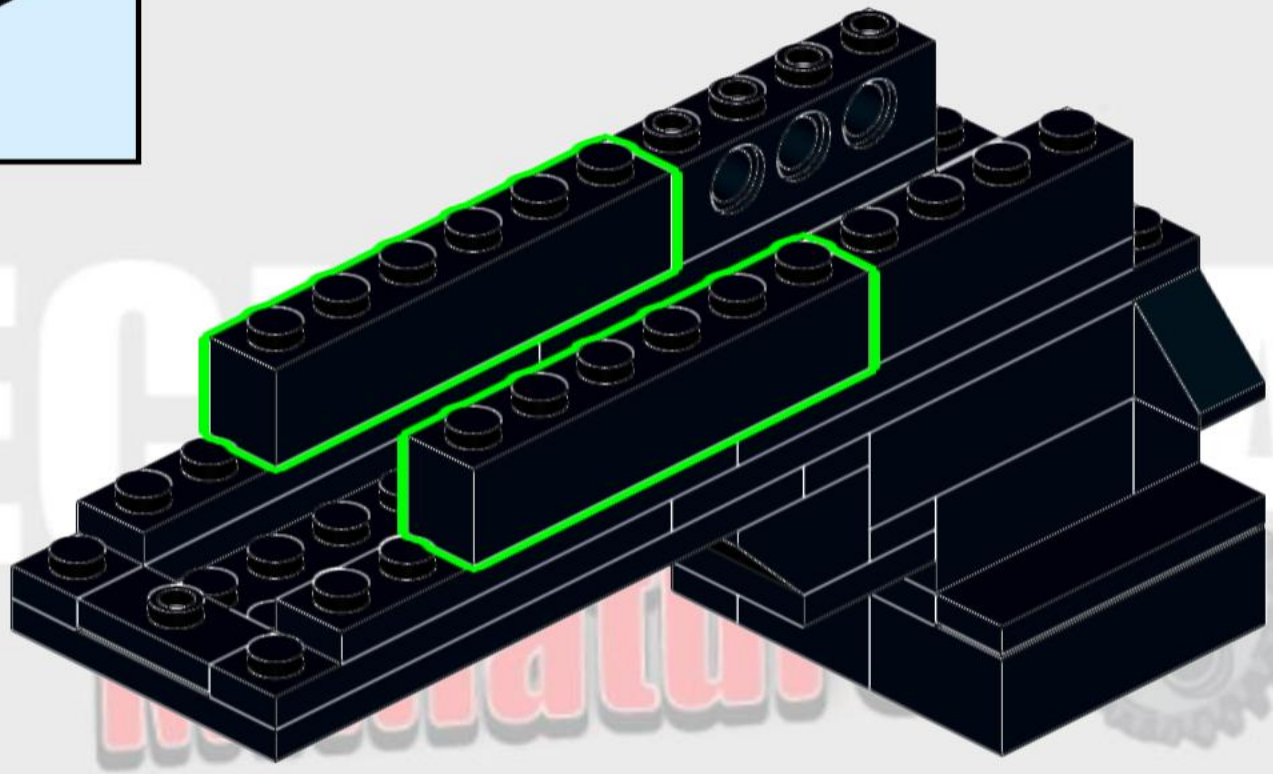

77

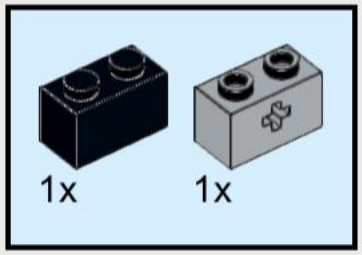

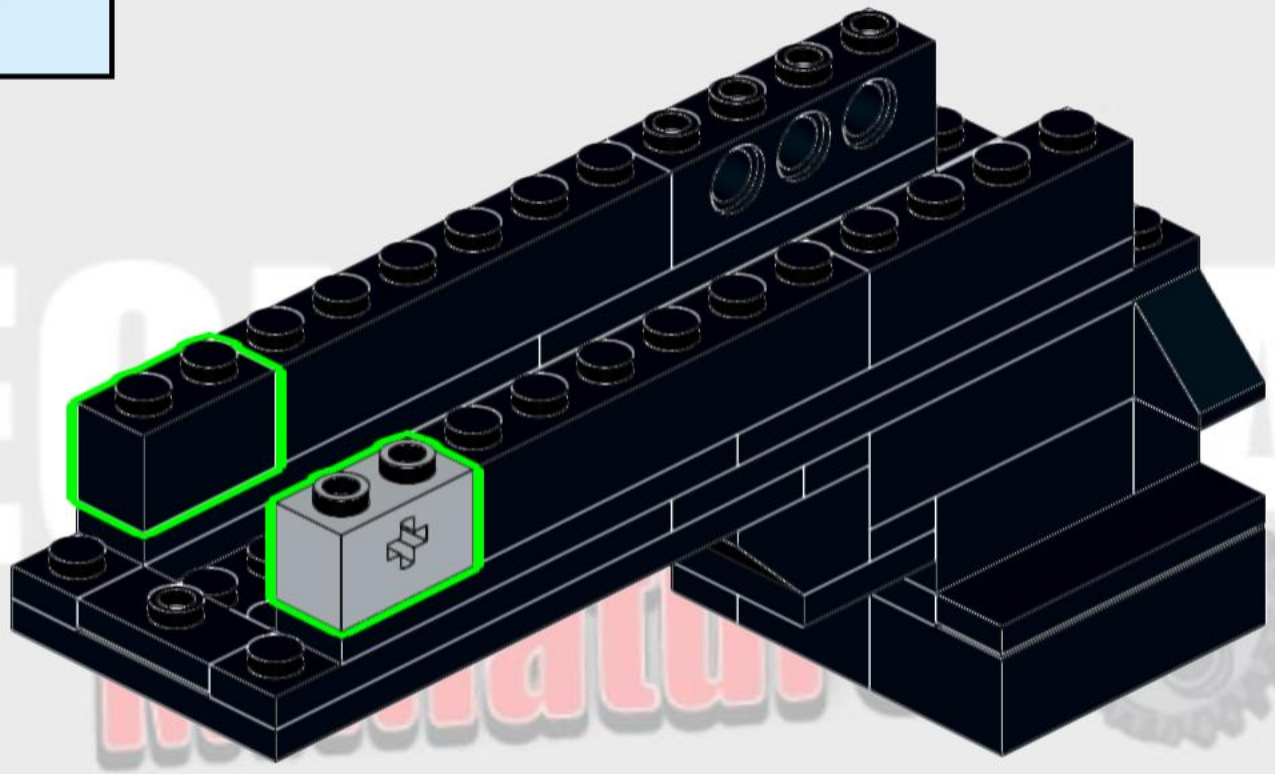

78

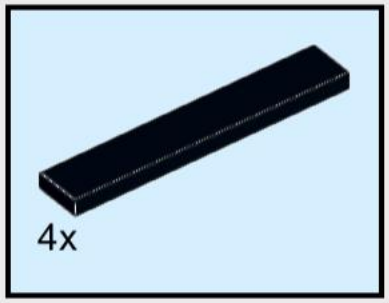

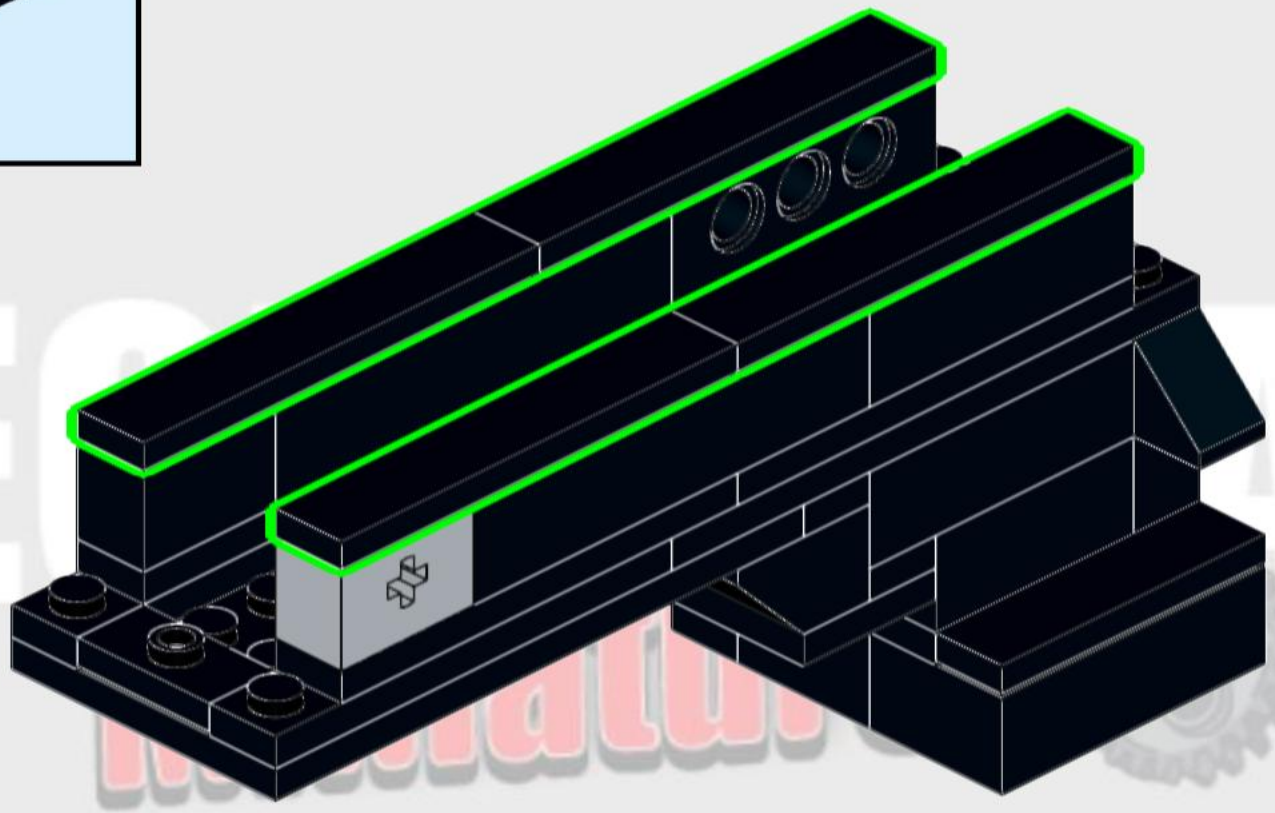



79

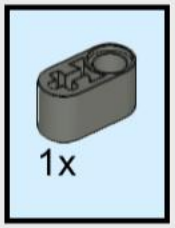

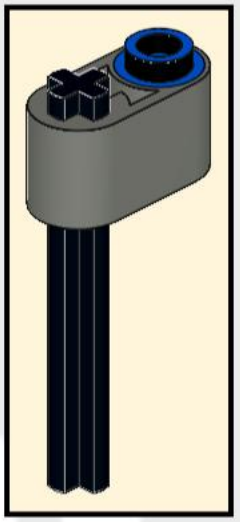

MECHANICAL
Miniatures



80

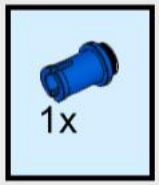

MECHANICAL
Miniatures



81

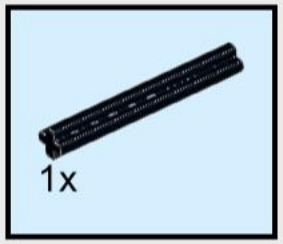

ENSURE AXLE HEIGHT IS
EVEN WITH BLUE PIN

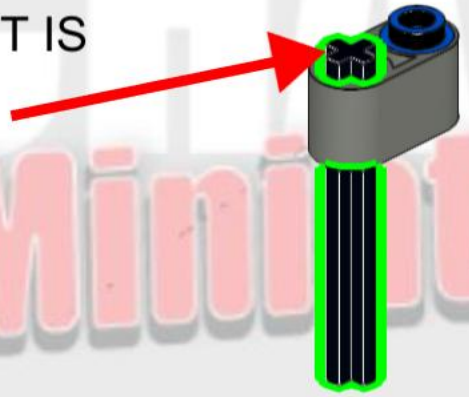

MECHANICAL
Miniatures



82

NOTE:
THIS SUPPORT IS ONLY
REQUIRED IF YOU HAVE NOT
PURCHASED A STAND



83

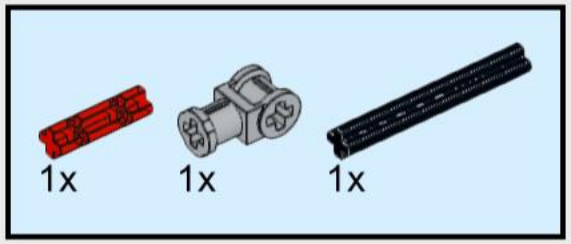

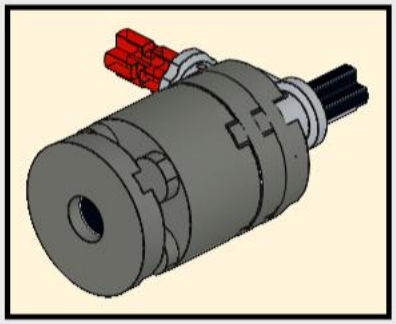

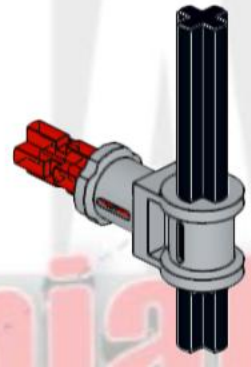

MECHANICAL
Miniatures

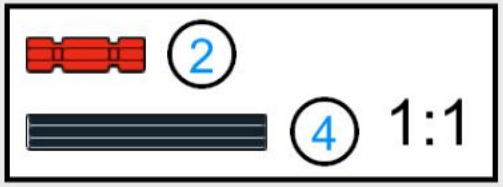

84

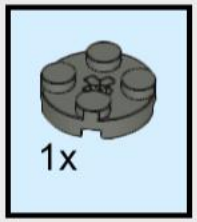

MECHANICAL
Miniatures

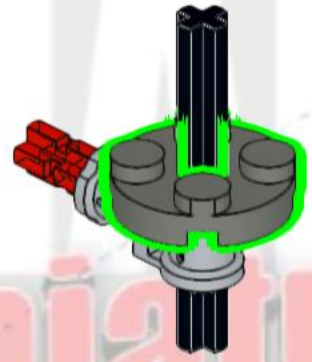

85

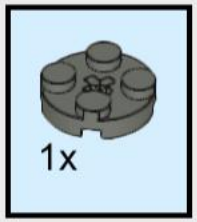

MECHANICAL
Miniatures

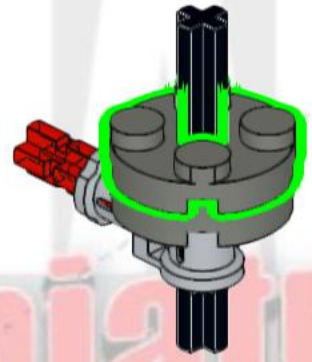

86

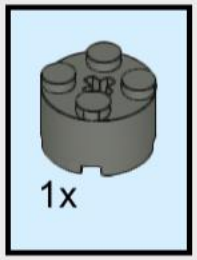

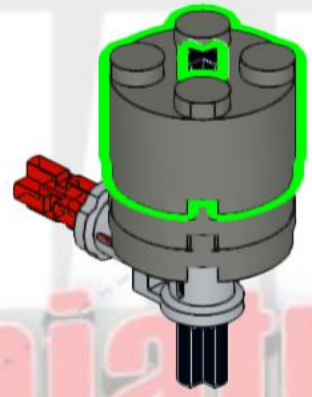

MECHANICAL
Miniatures

87



MECHANICAL
Miniatures

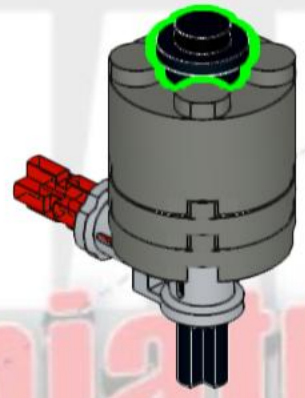

88

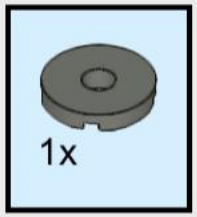

MECHANICAL
Miniatures

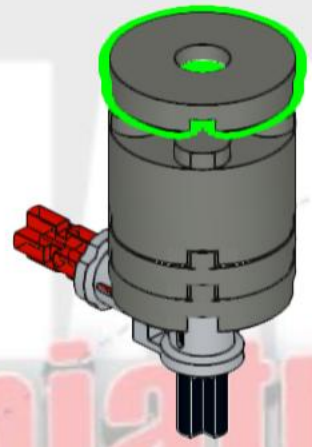

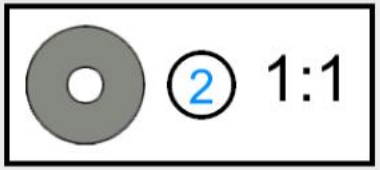

89

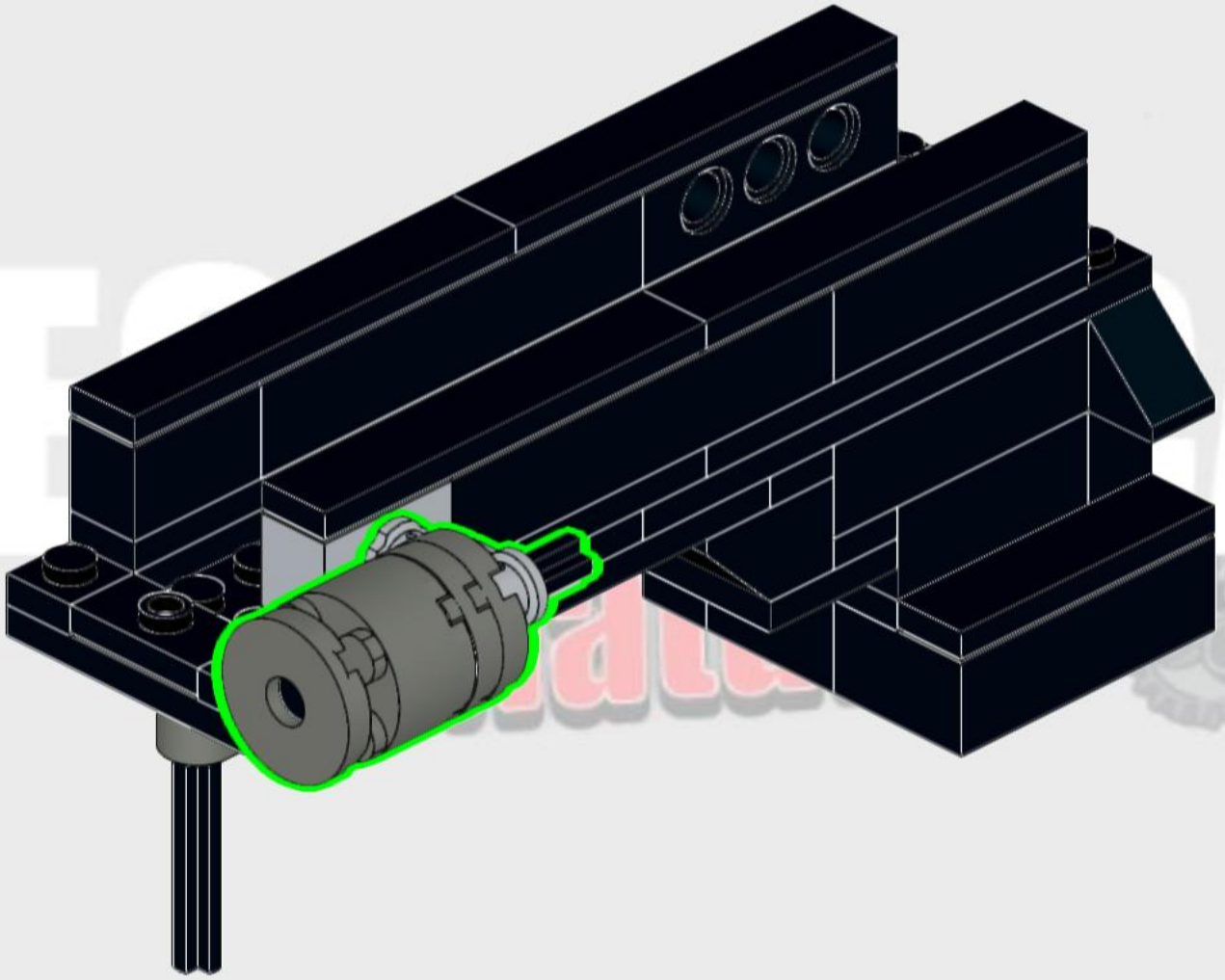

90

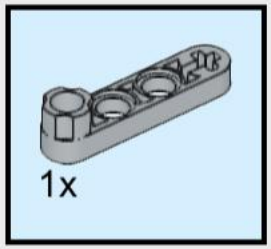

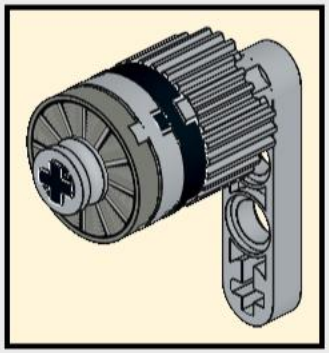

MECHANICAL
Miniatures

91

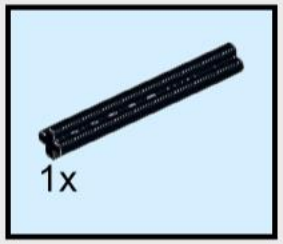

MECHANICAL
Miniatures

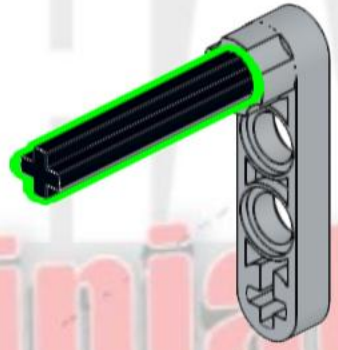



92



1x

MECHANICAL Miniatures

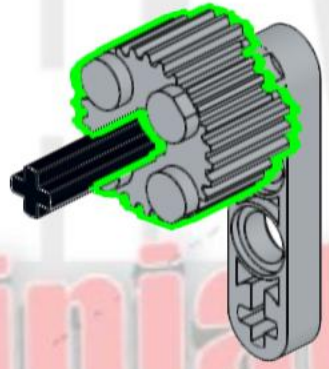

93

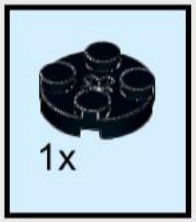

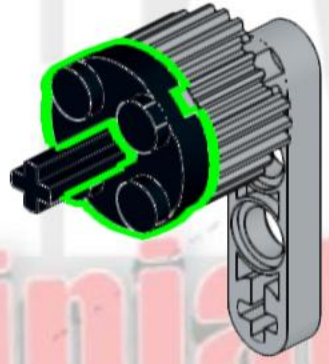

MECHANICAL
Miniatures

94

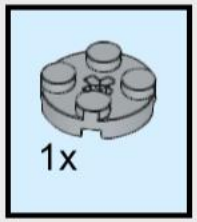

MECHANICAL
Miniatures

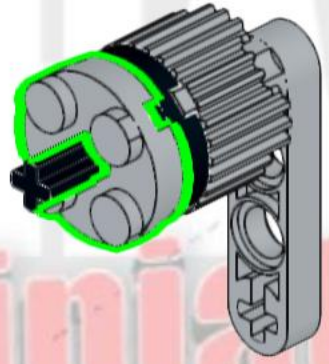

95

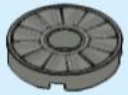

1x

MECHANICAL Miniatures

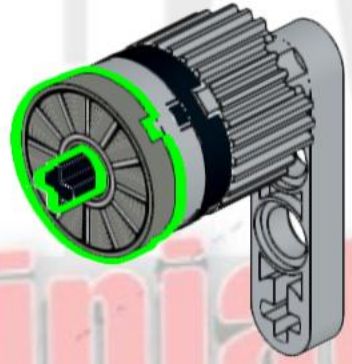



2 1:1

96



MECHANICAL
Miniatures

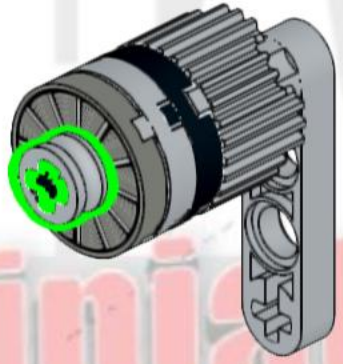

97

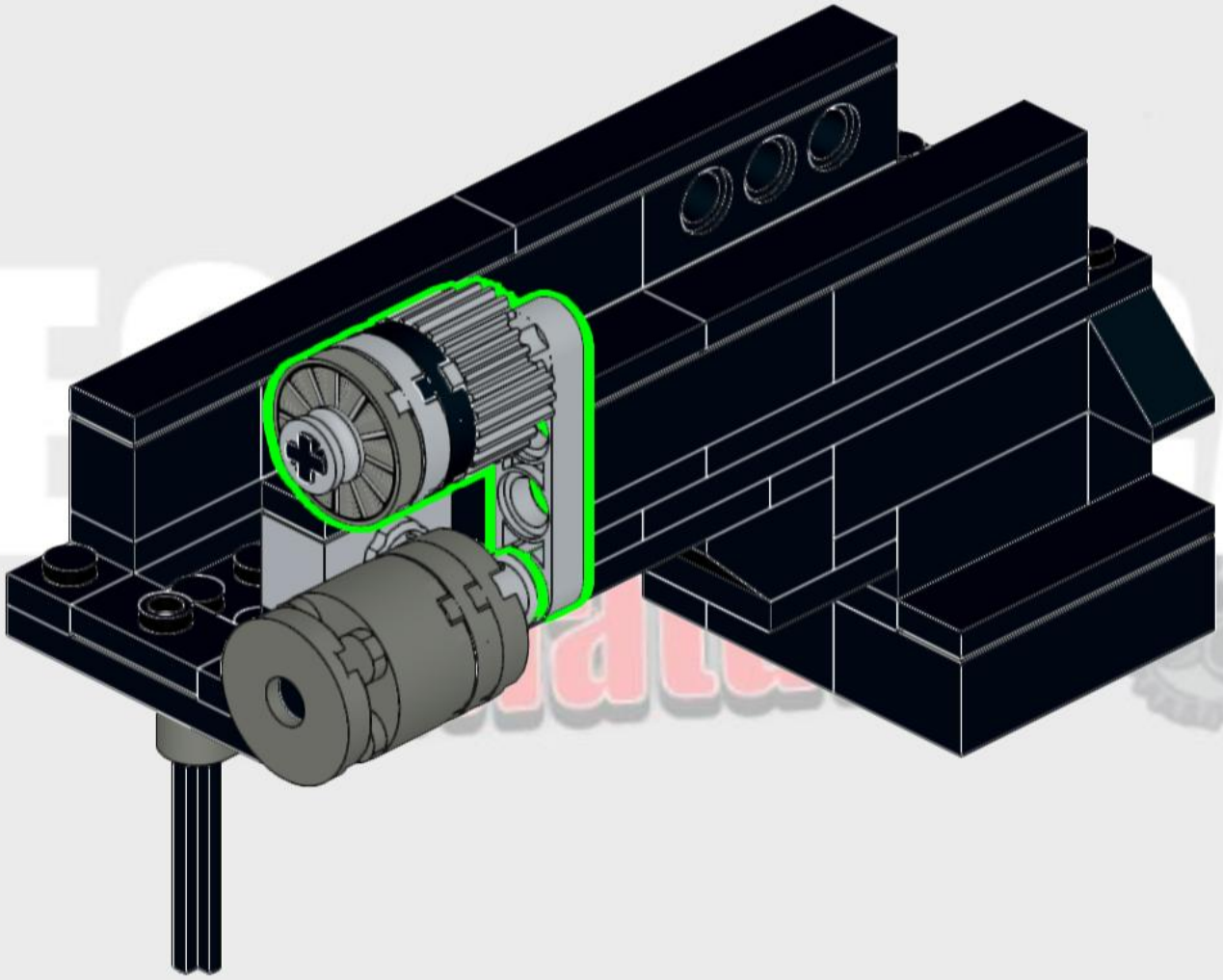

98

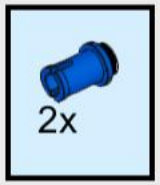

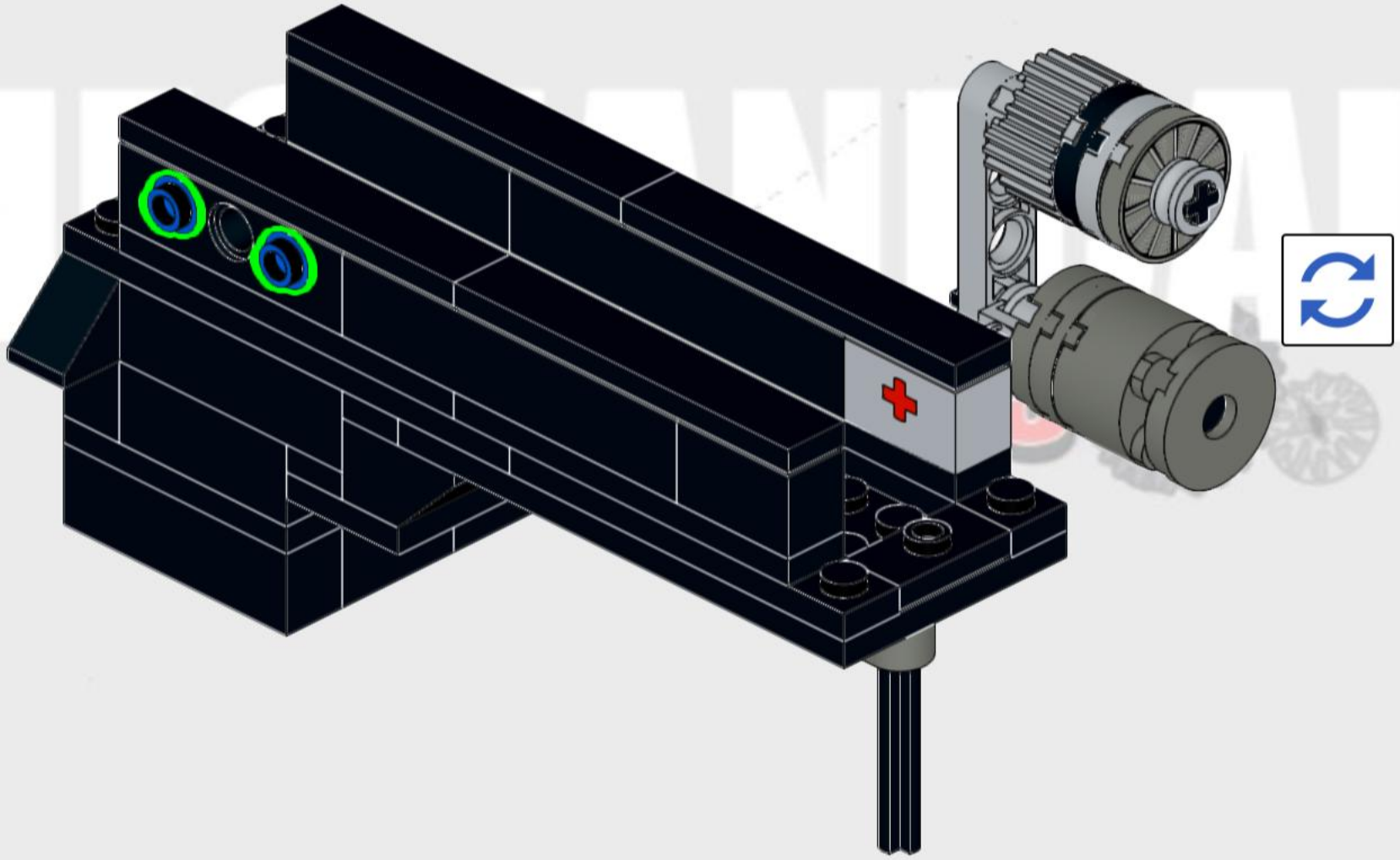

99

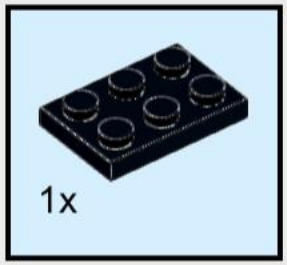

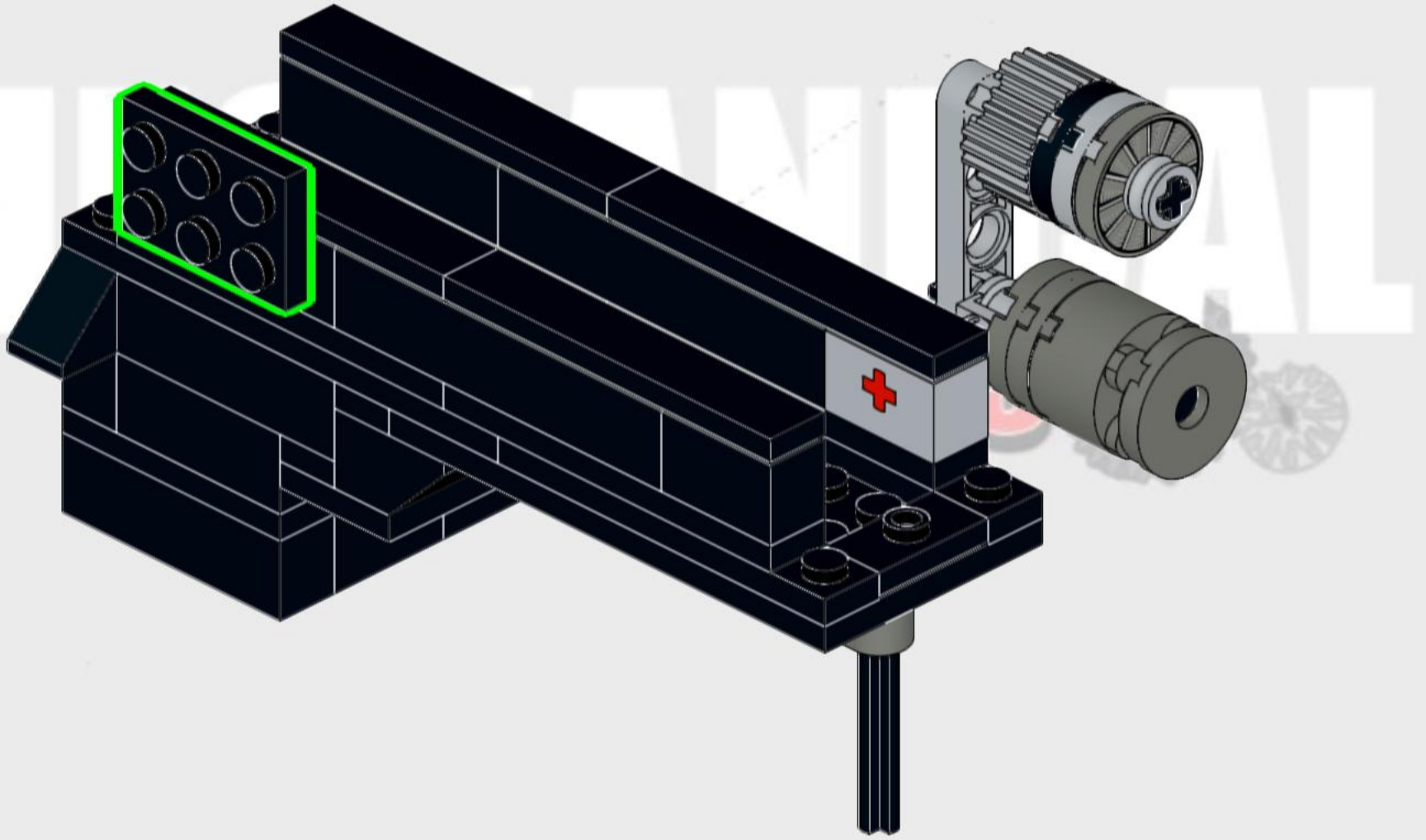

100

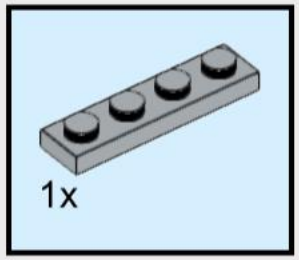

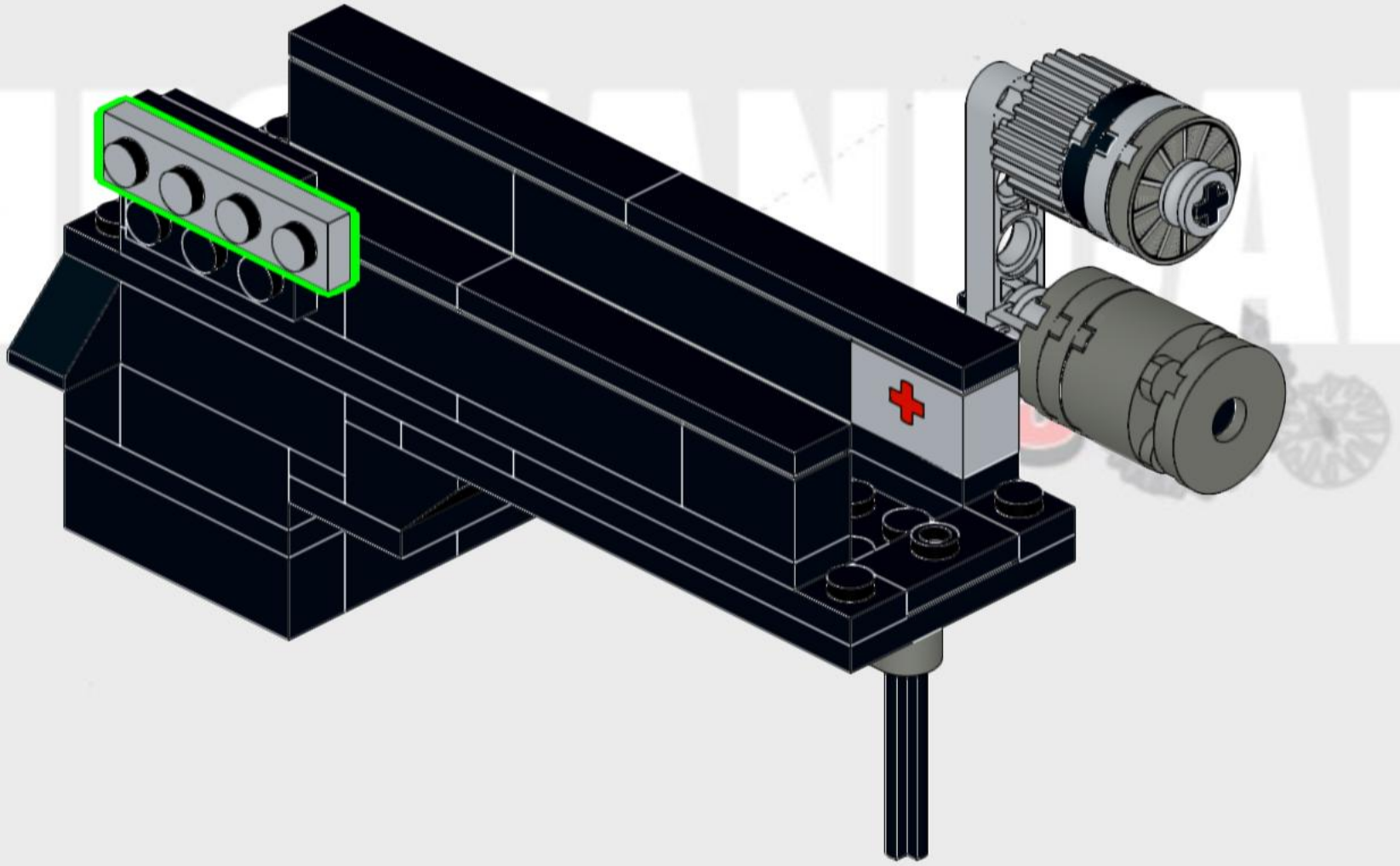

101

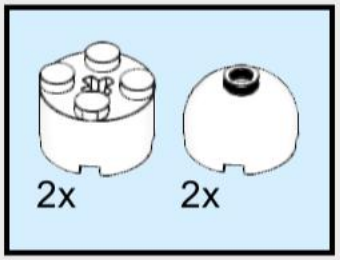

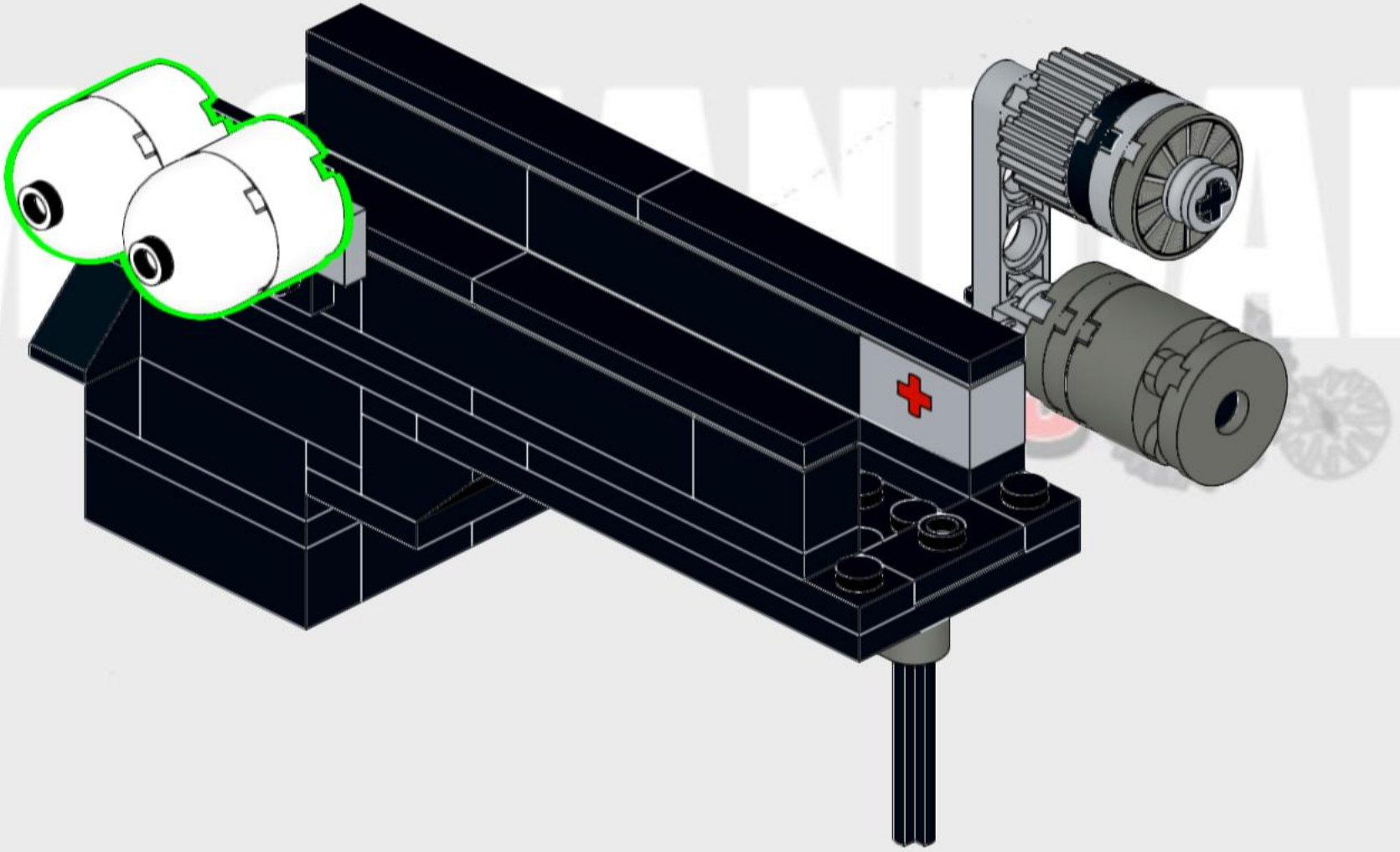

102

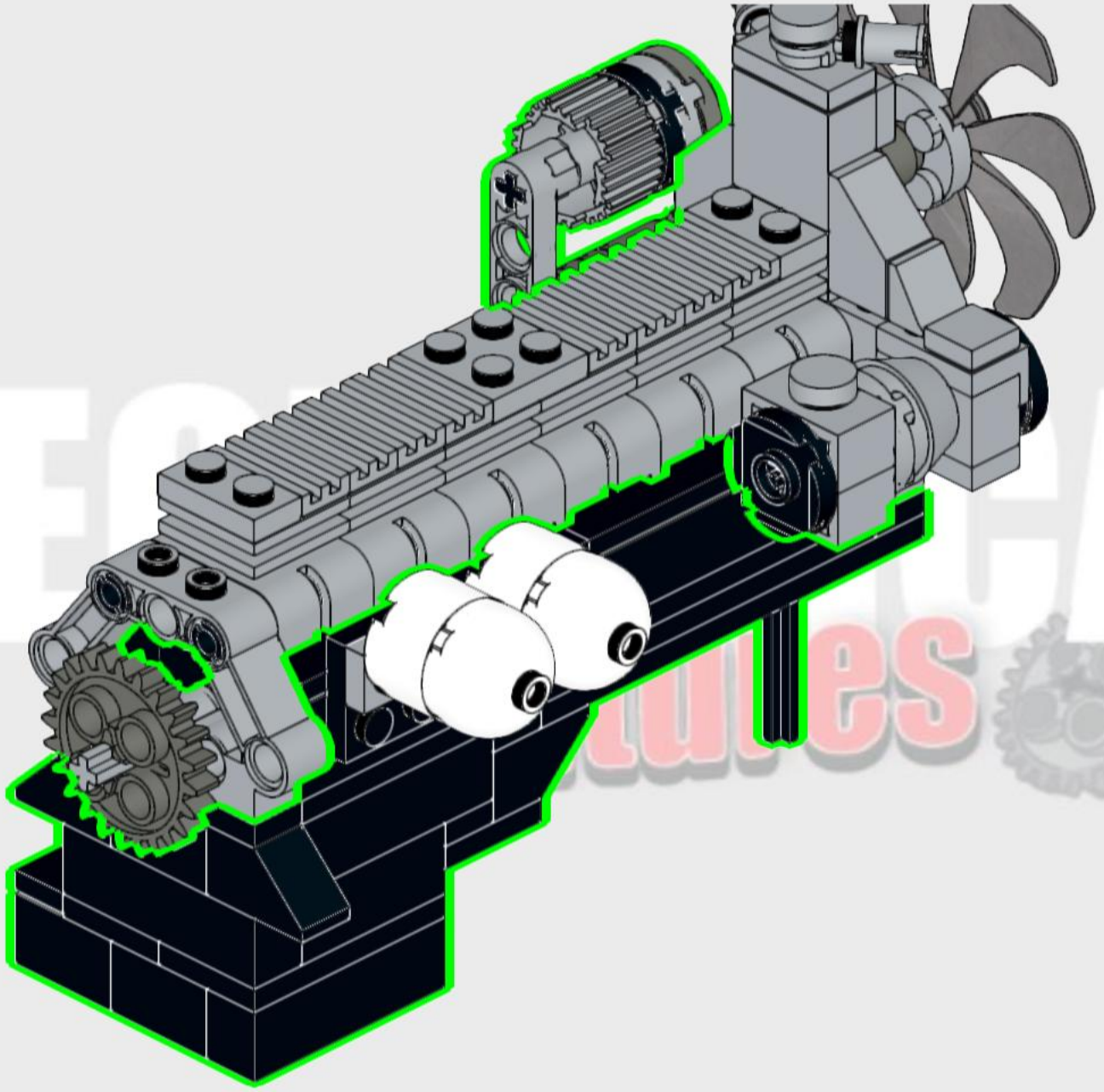

103

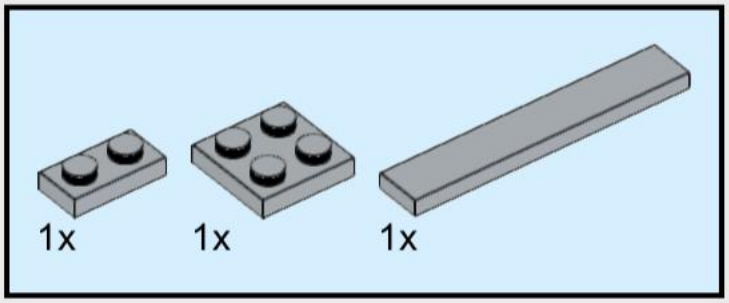

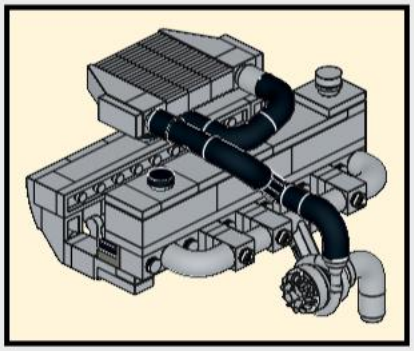

MECHANICAL
Miniatures

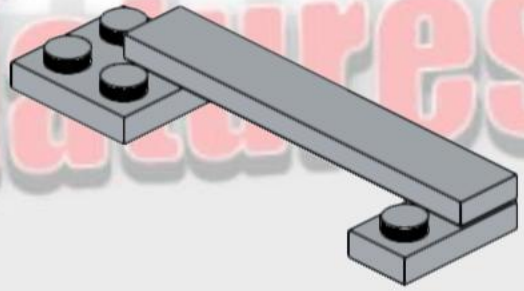

104

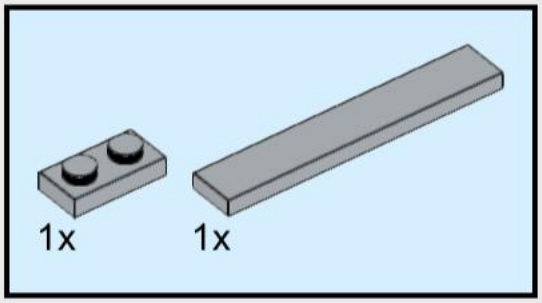

MECHANICAL
Miniatures

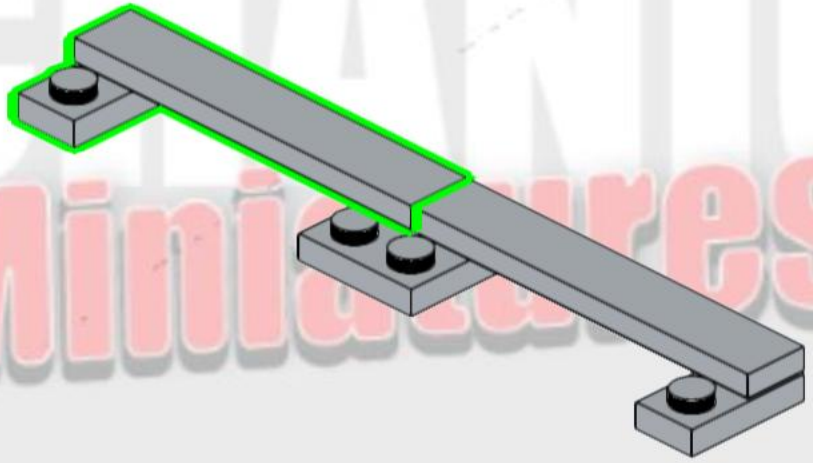

6 1:1

105

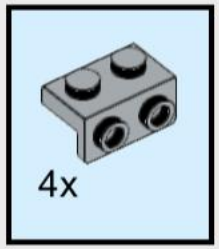

MECHANICAL Miniatures

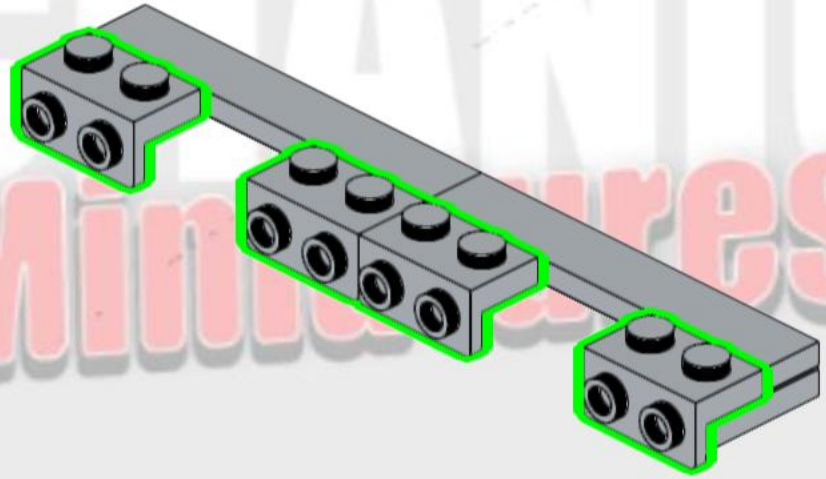

106

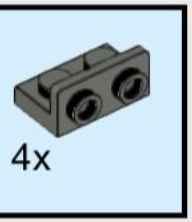

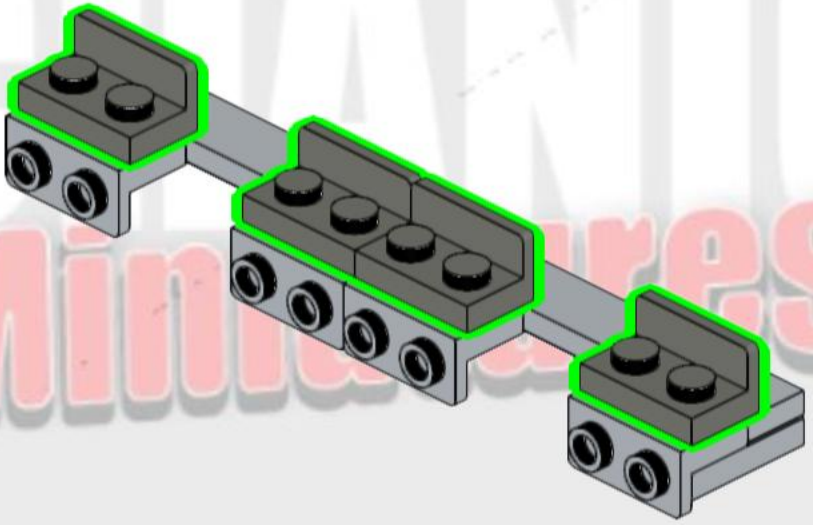

MECHANICAL Miniatures

107

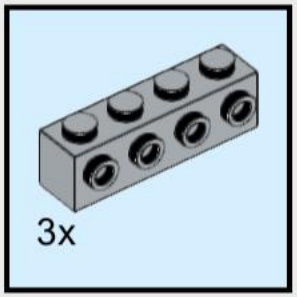

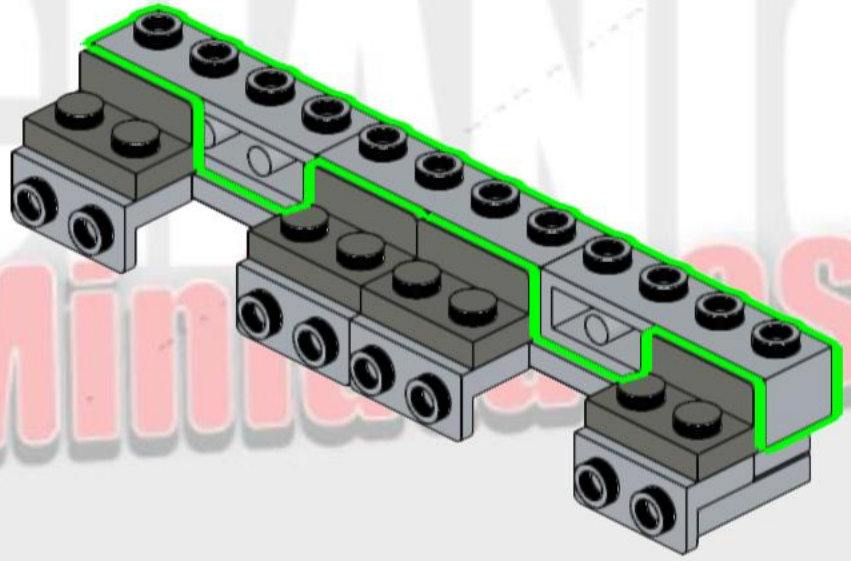

108

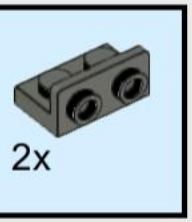

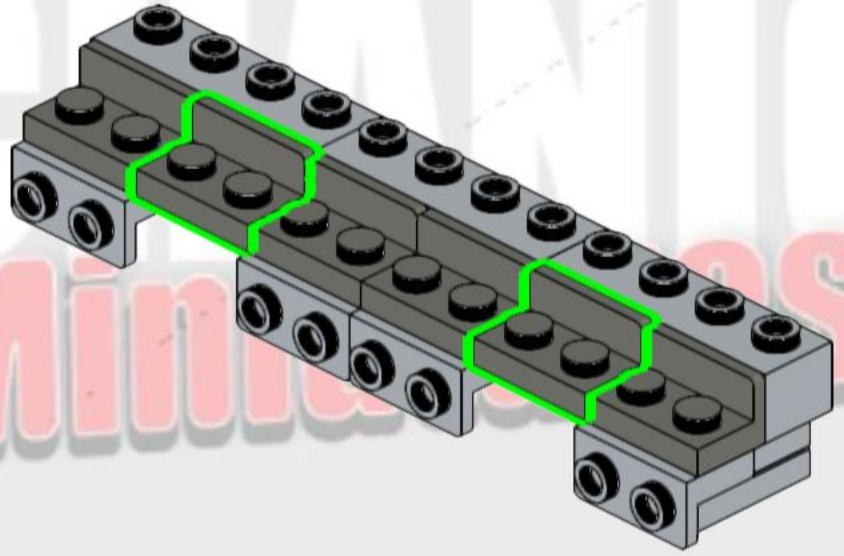

109

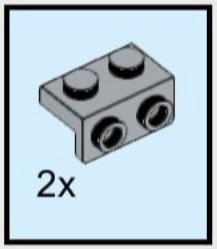

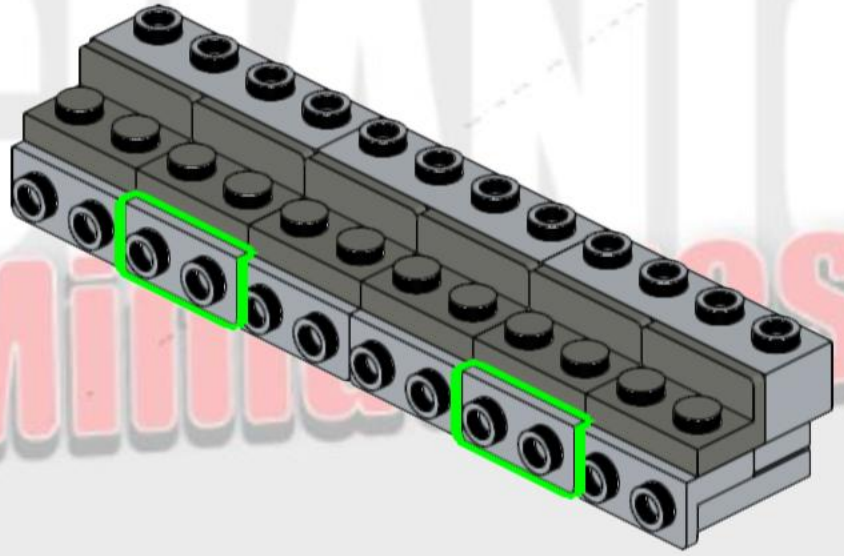

110



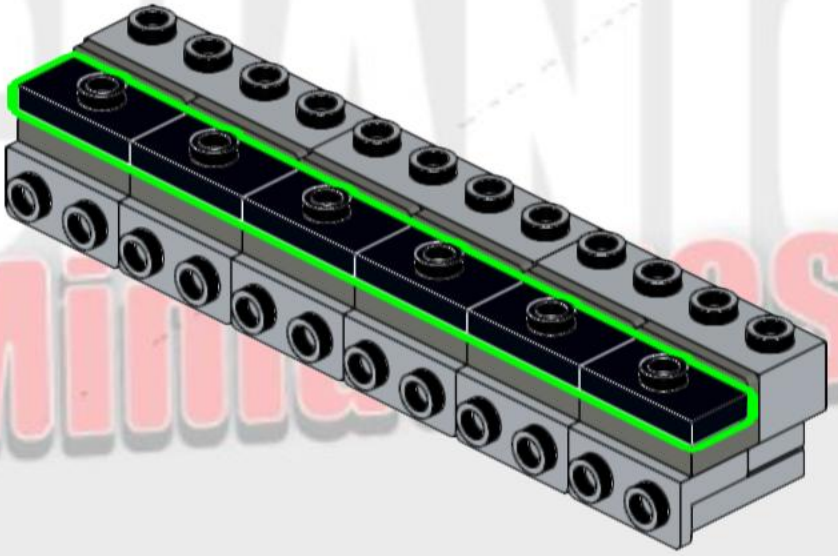

111

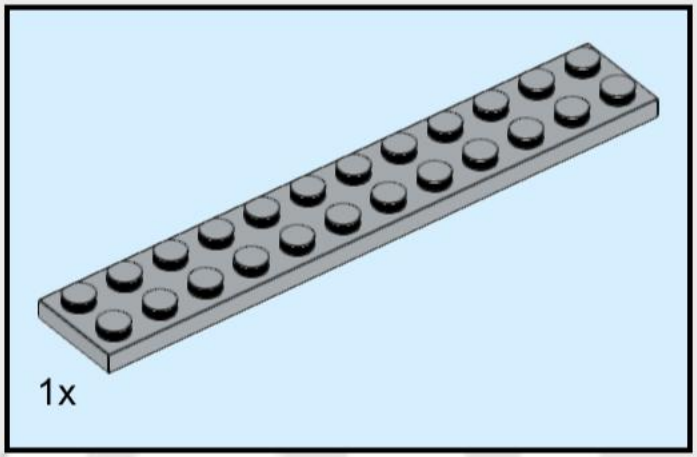

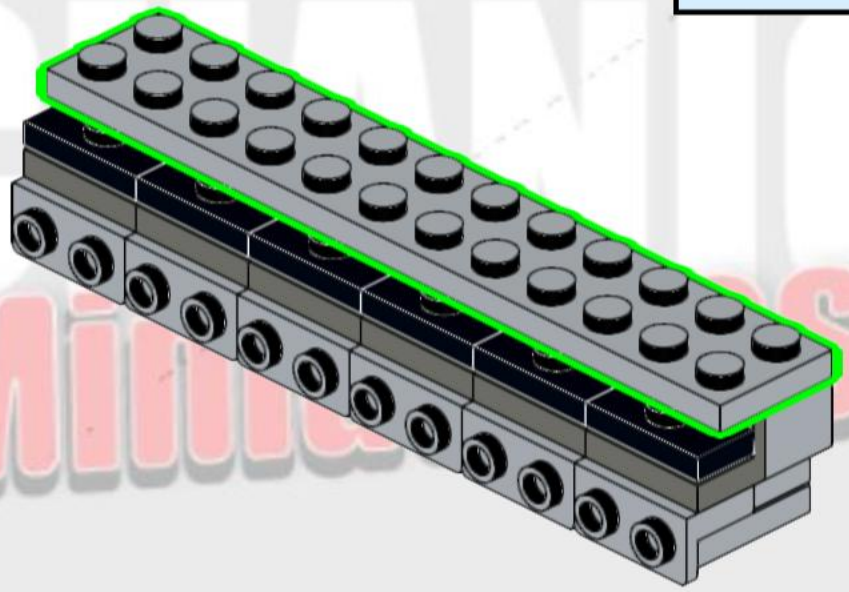

112

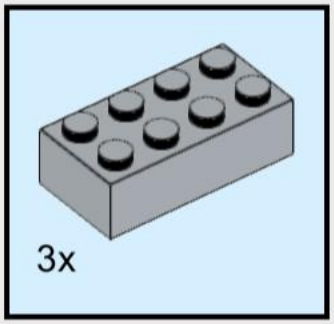

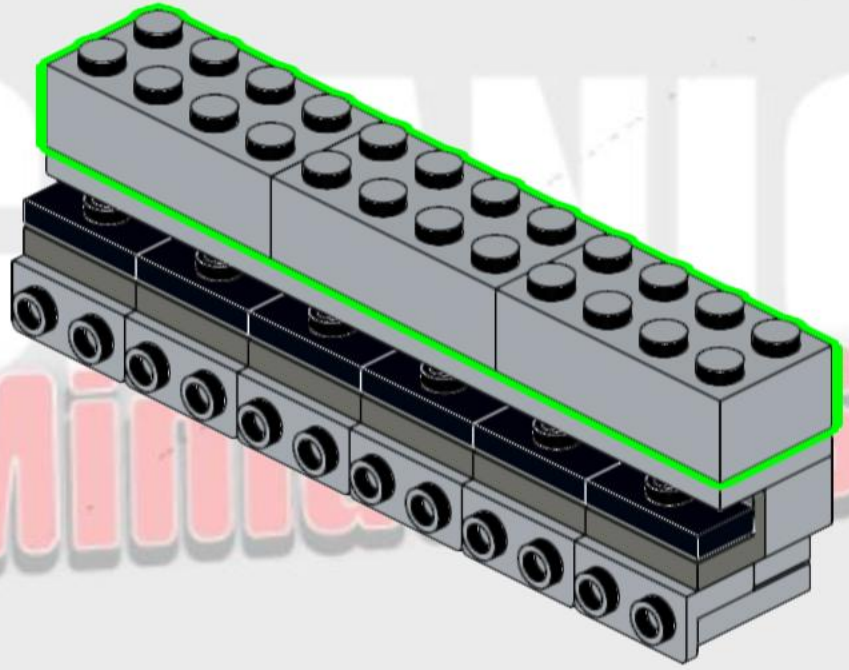

113

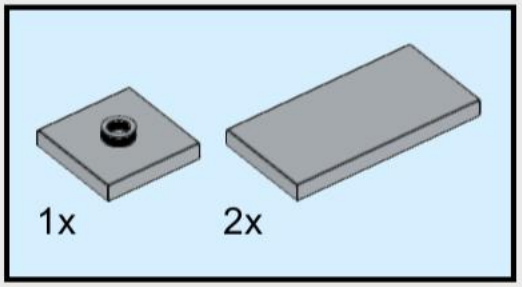

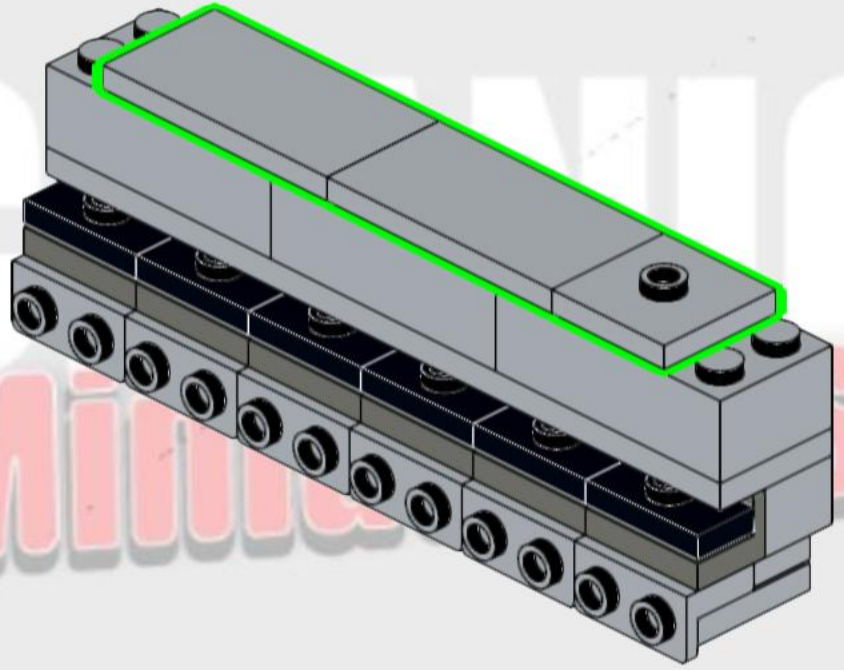

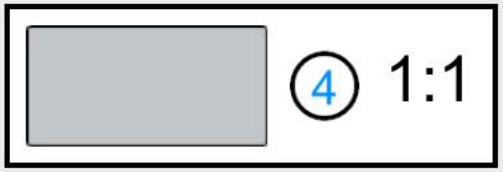

114

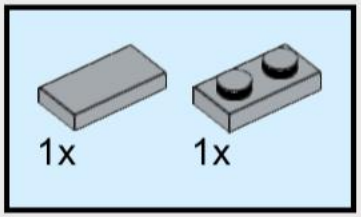

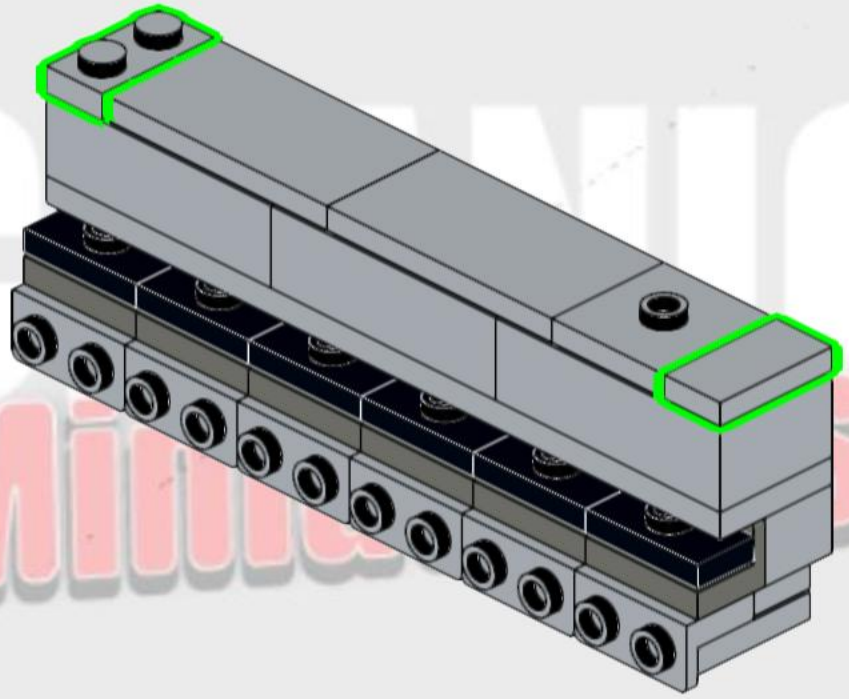

MECHANICAL
Minds



115

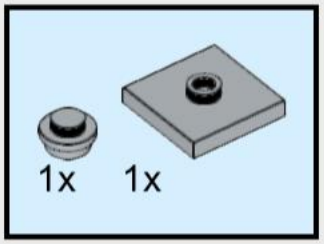

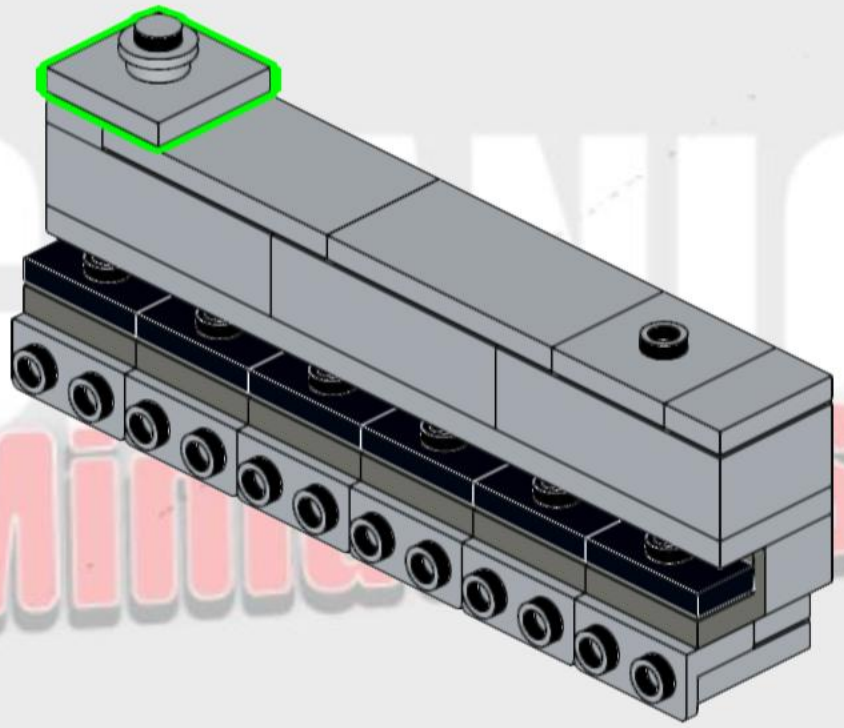

116

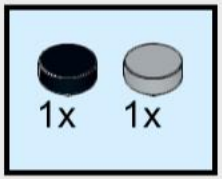

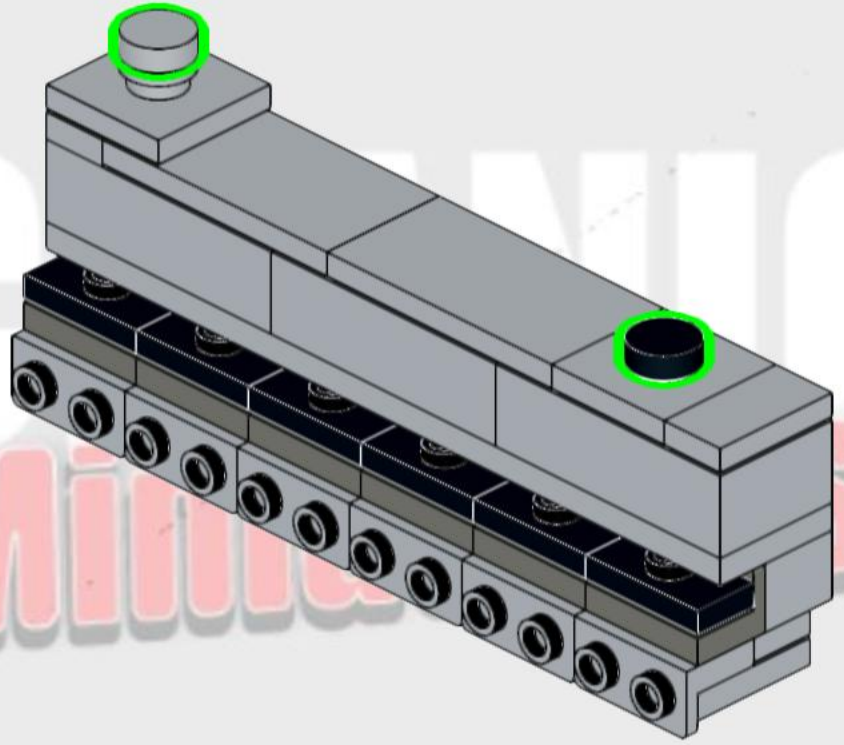

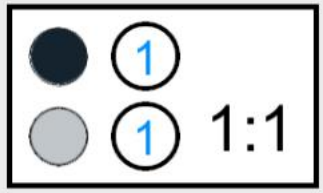

117

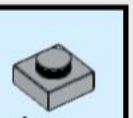

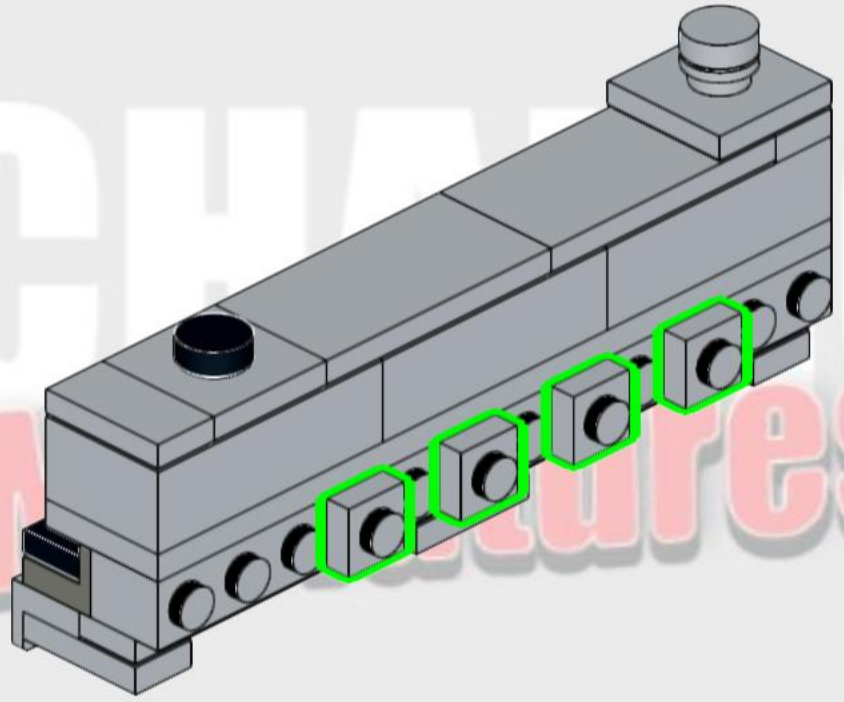

118

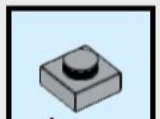

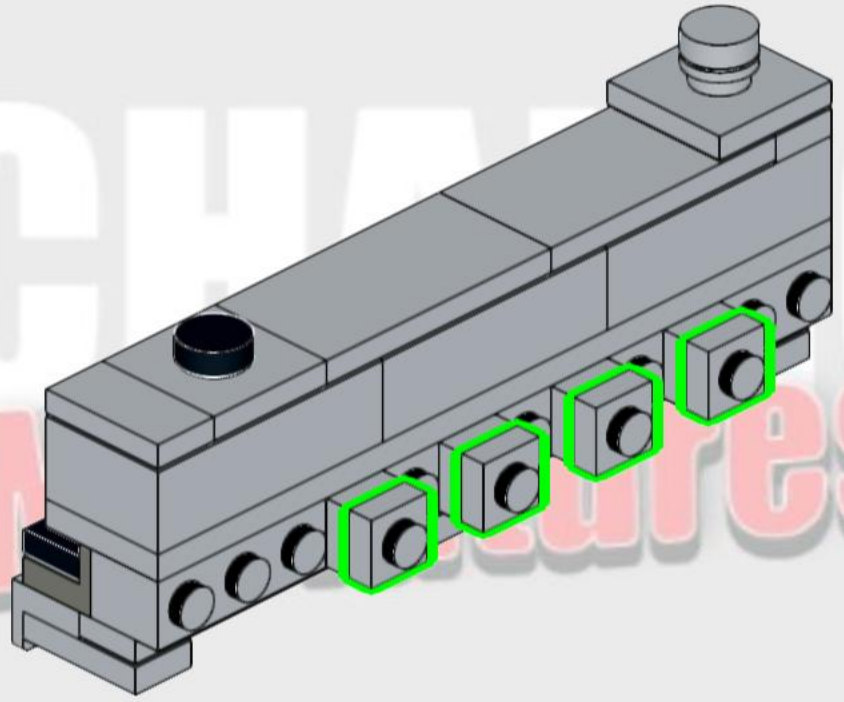

119

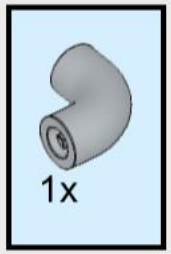

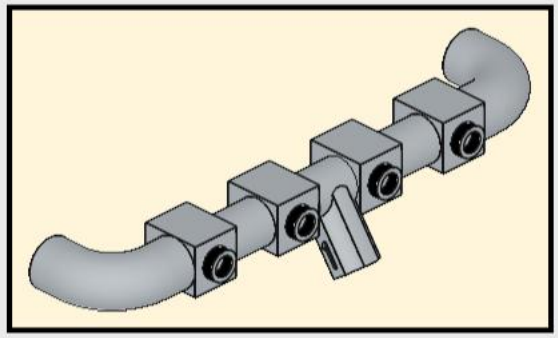

MECHANICAL
Miniatures



120

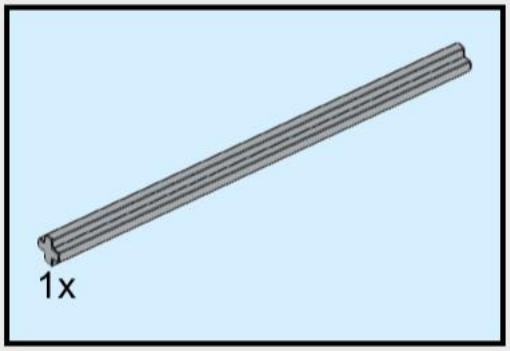

MECHANICAL
Miniatures

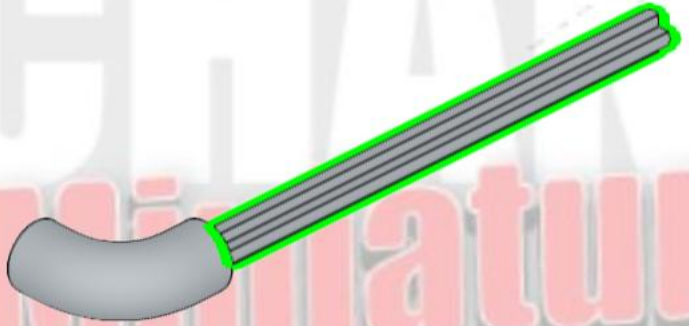



121

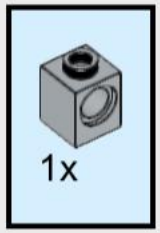

MECHANICAL Miniatures

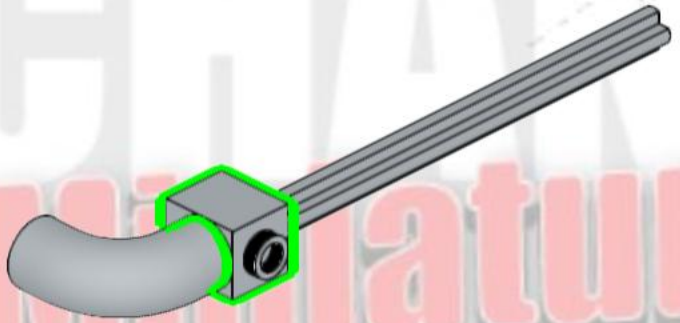

122



MECHANICAL Miniatures

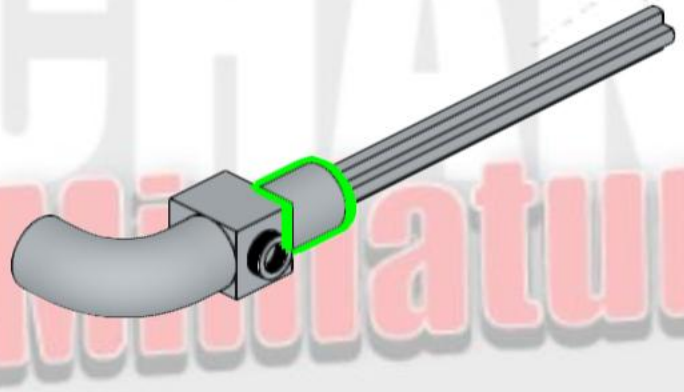

123

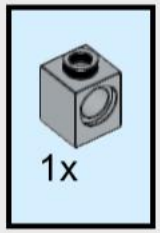

MECHANICAL Miniatures

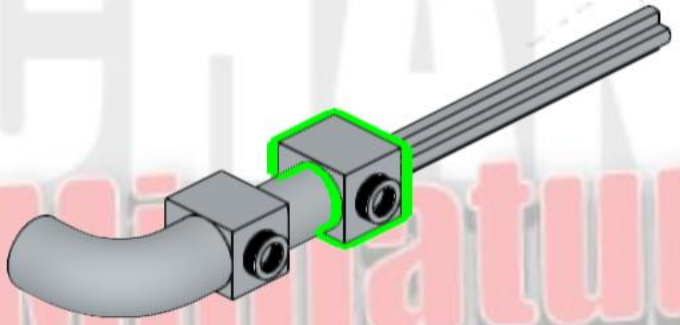

124

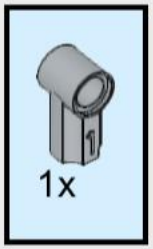

MECHANICAL
Miniatures

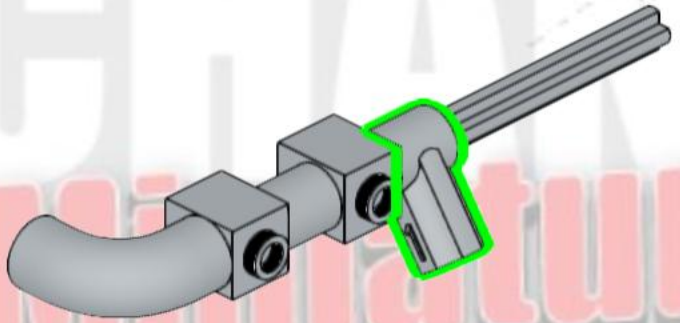

125

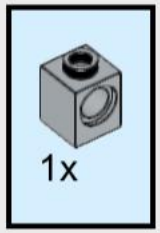

MECHANICAL Miniatures

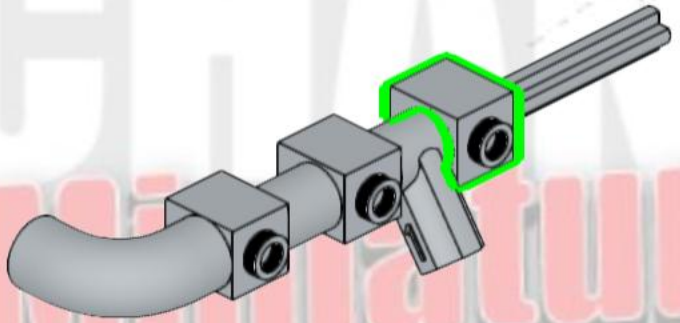

126



MECHANICAL
Miniatures

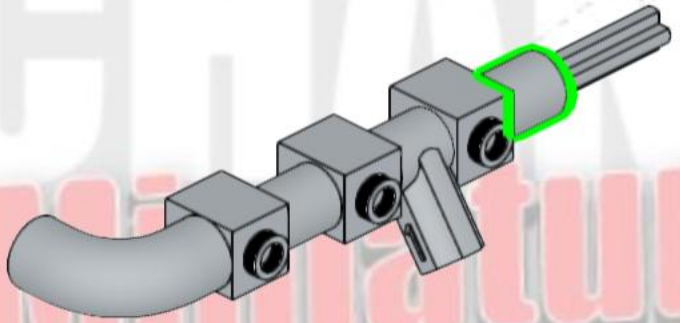

127

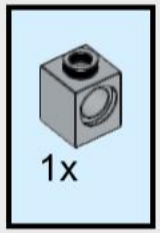

MECHANICAL
Miniatures

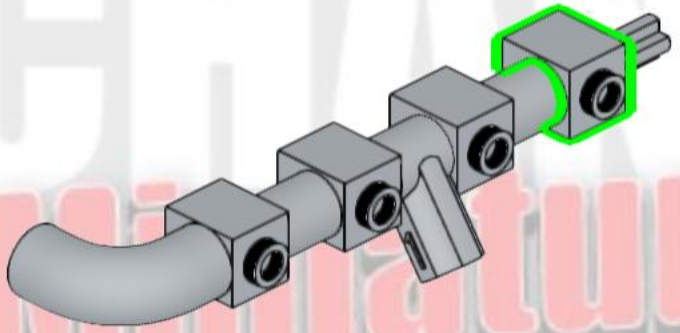

128

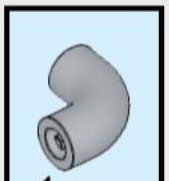

MECHANICAL
Miniatures

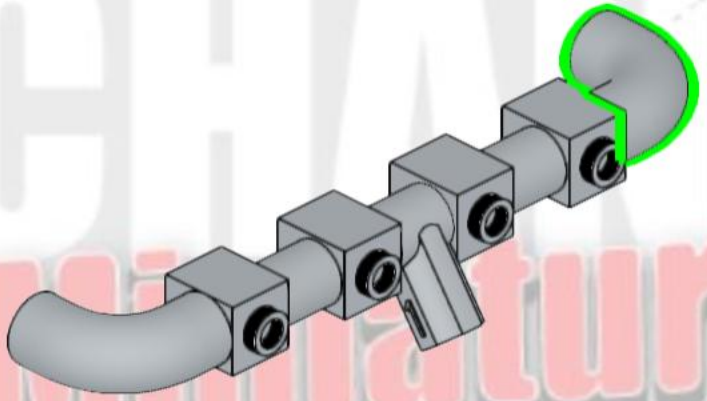

129

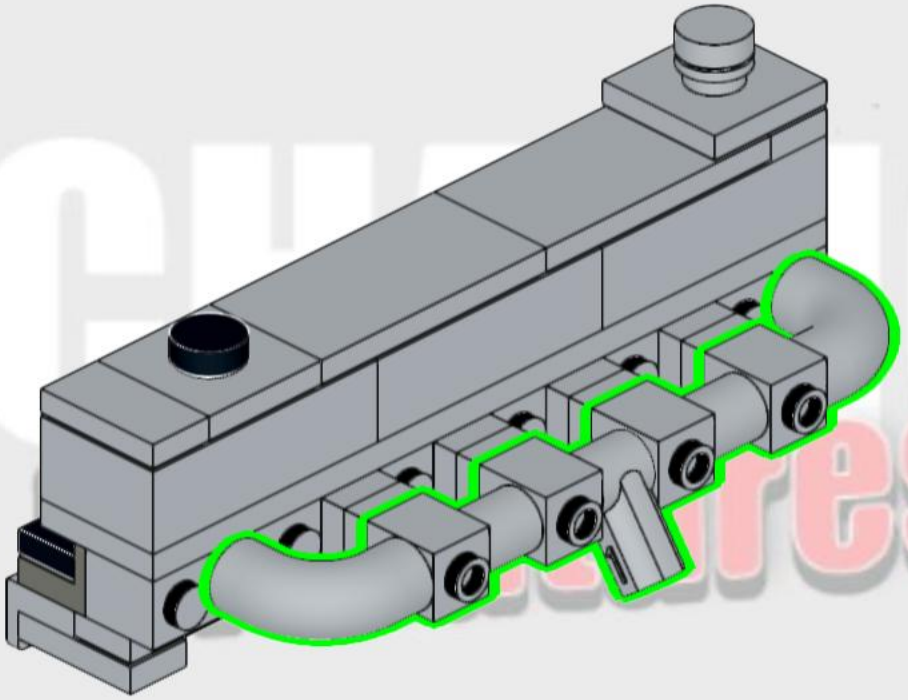

130

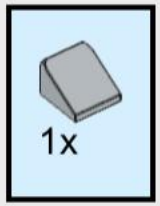

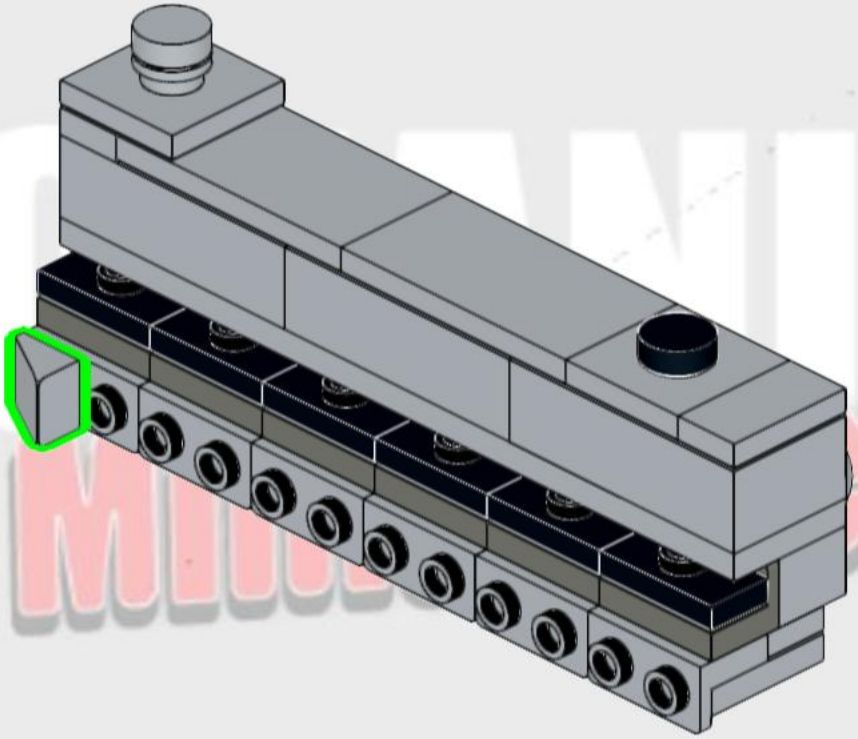

131

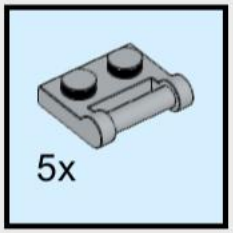

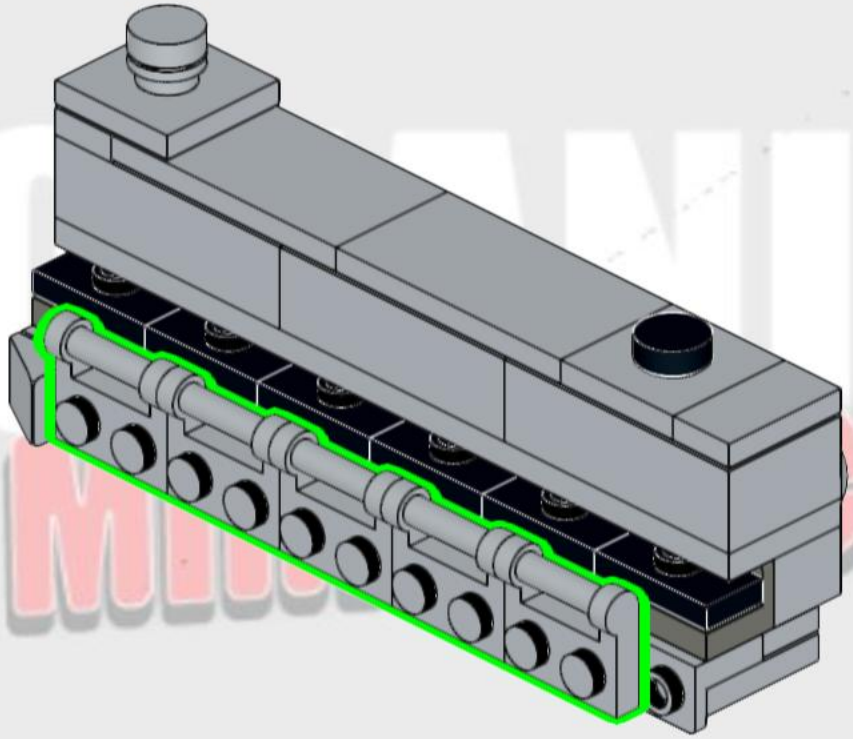

132

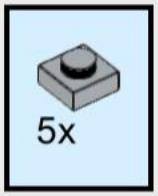

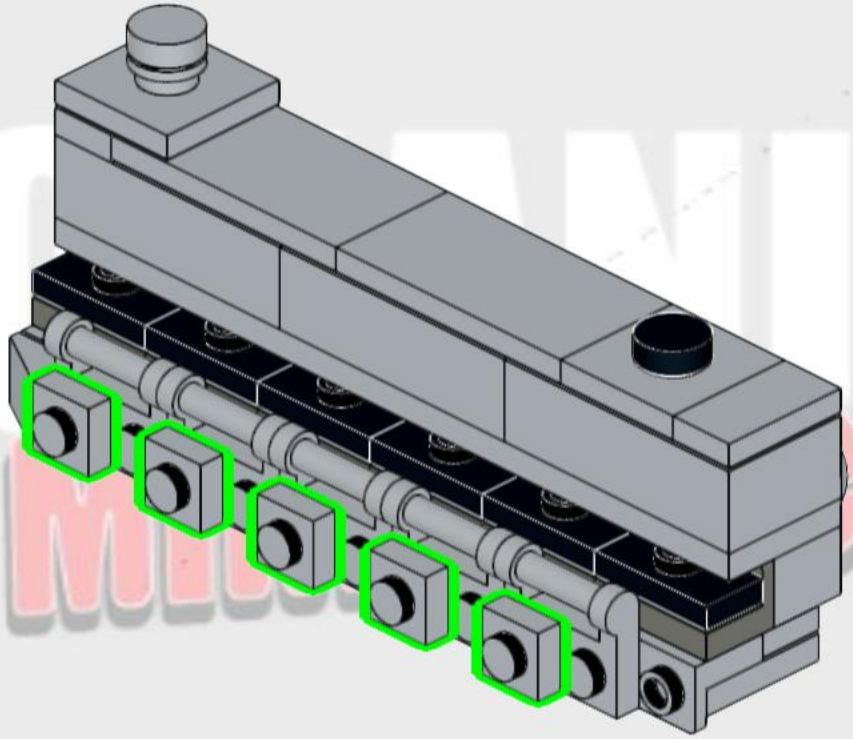

133

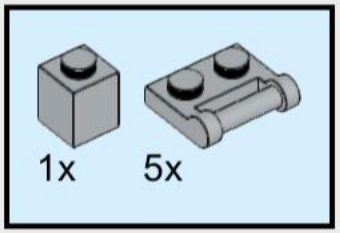

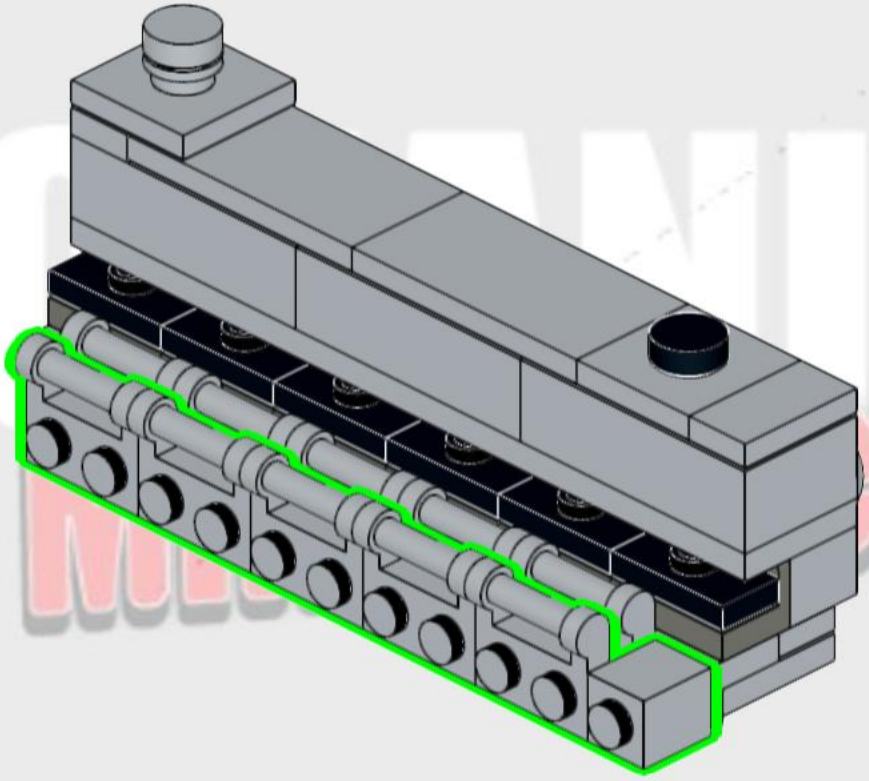

134

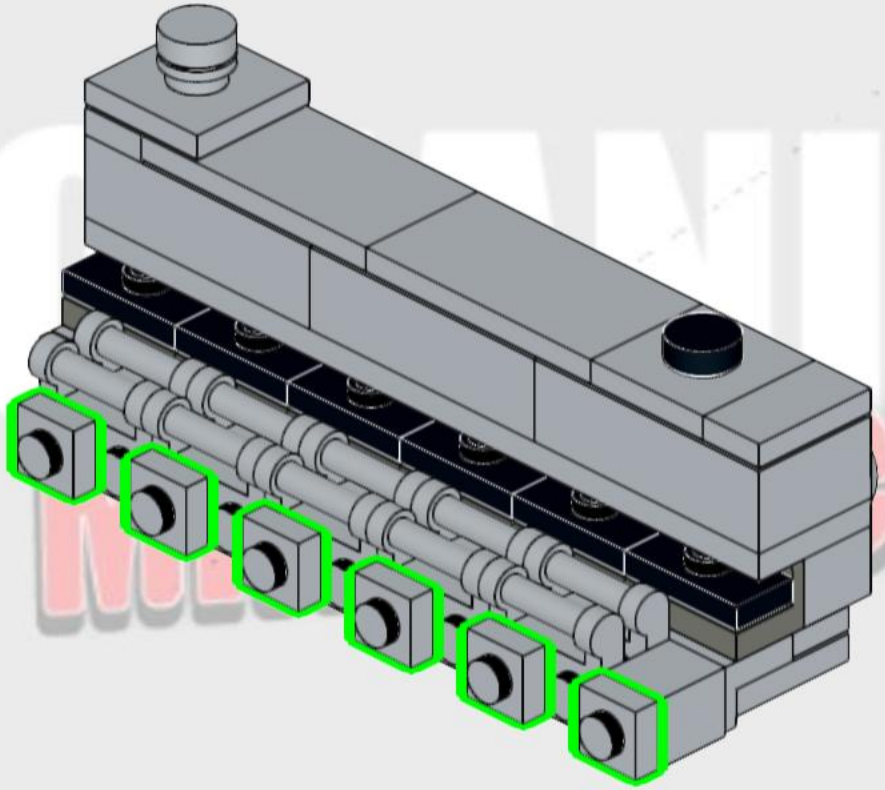

135

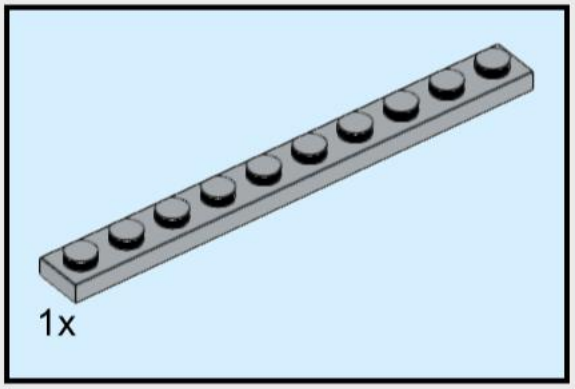

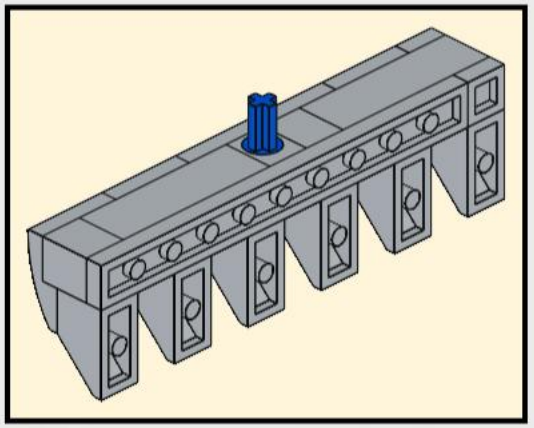



MECHANICAL Miniatures

136

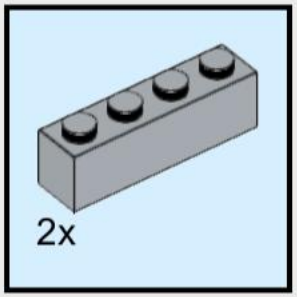

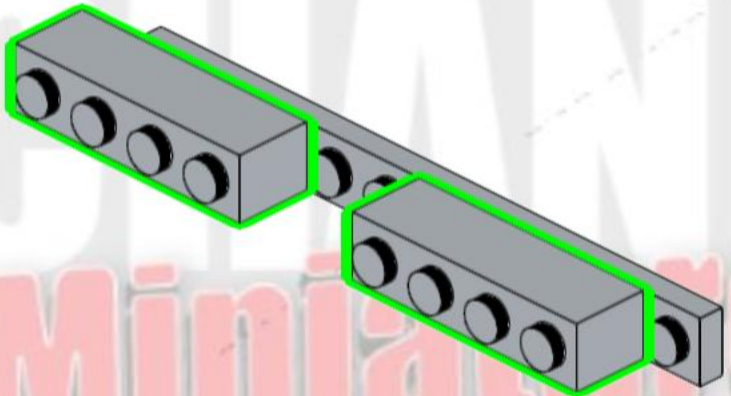

MECHANICAL Miniatures

137



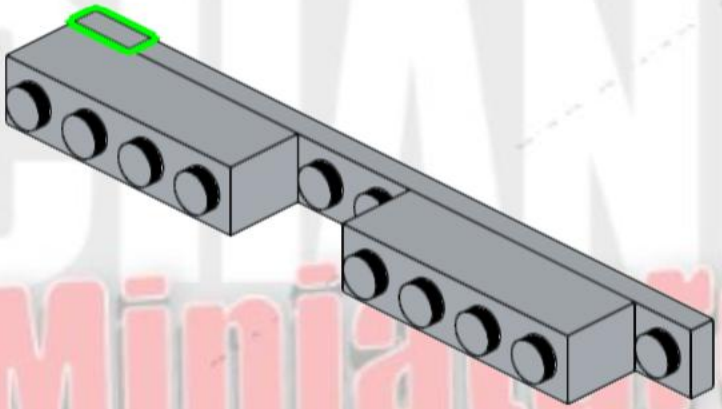

MECHANICAL Miniatures

138

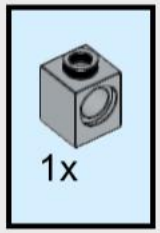

MECHANICAL Miniatures

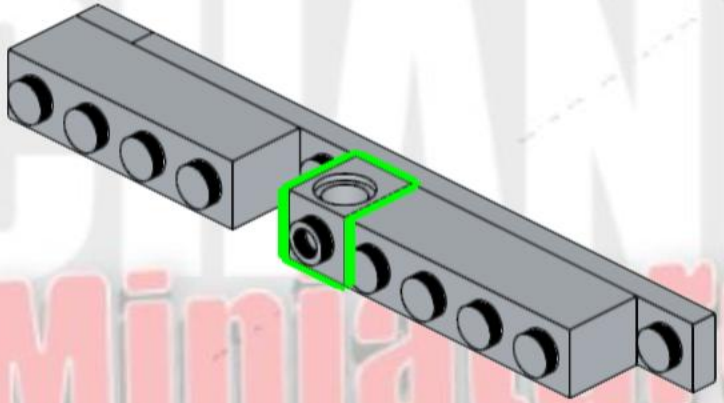

139

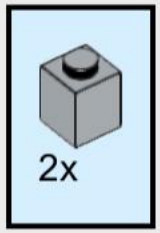

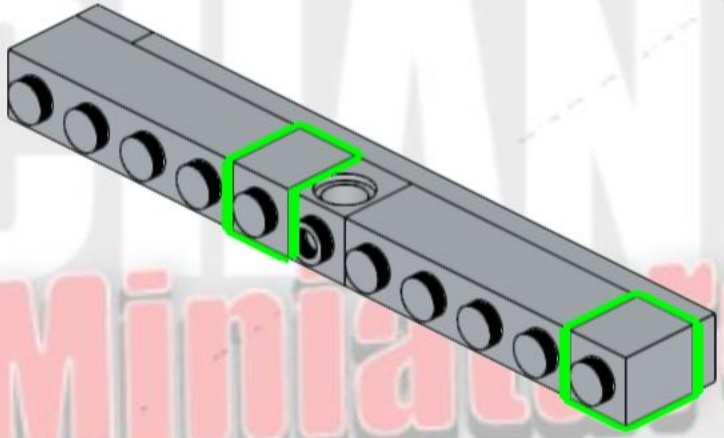

MECHANICAL Miniatures

140

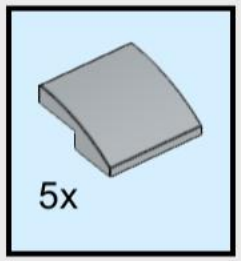

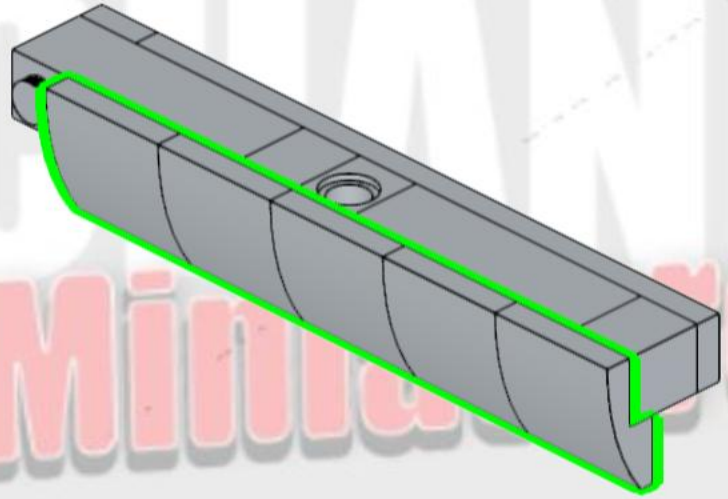

MECHANICAL Miniatures

141

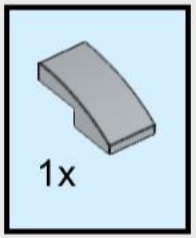

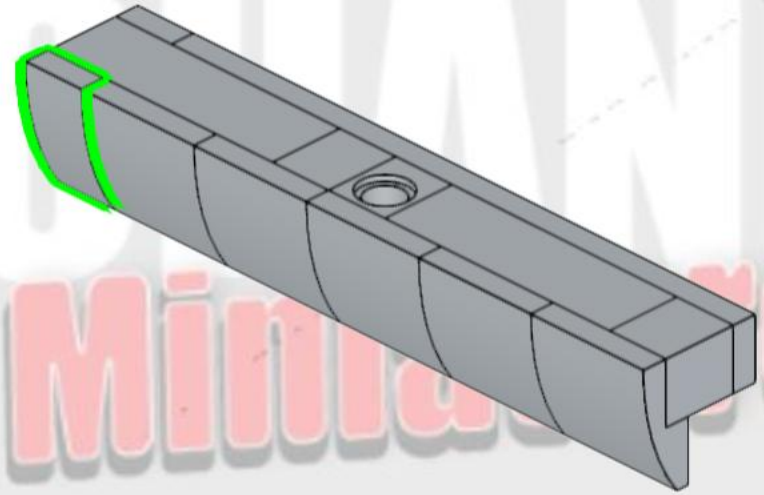

MECHANICAL Miniatures

142

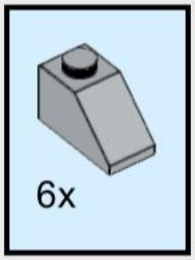

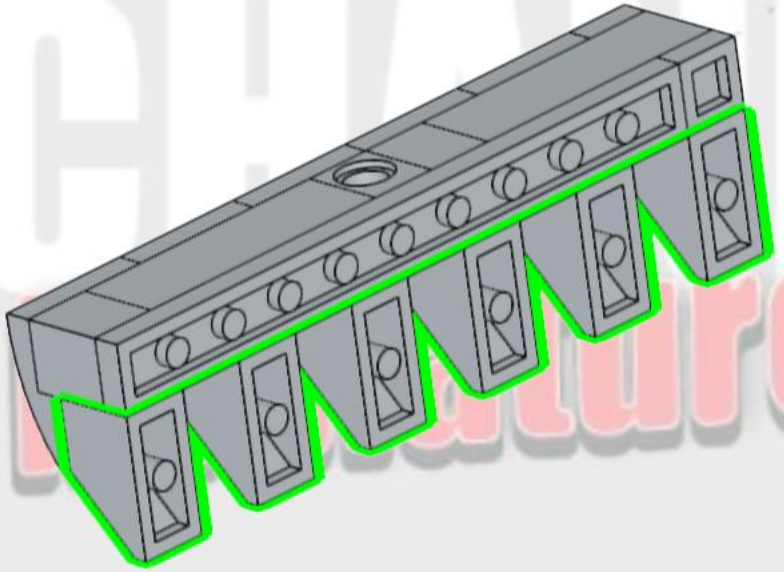

143

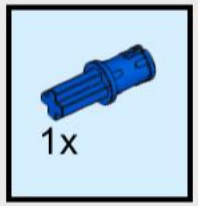

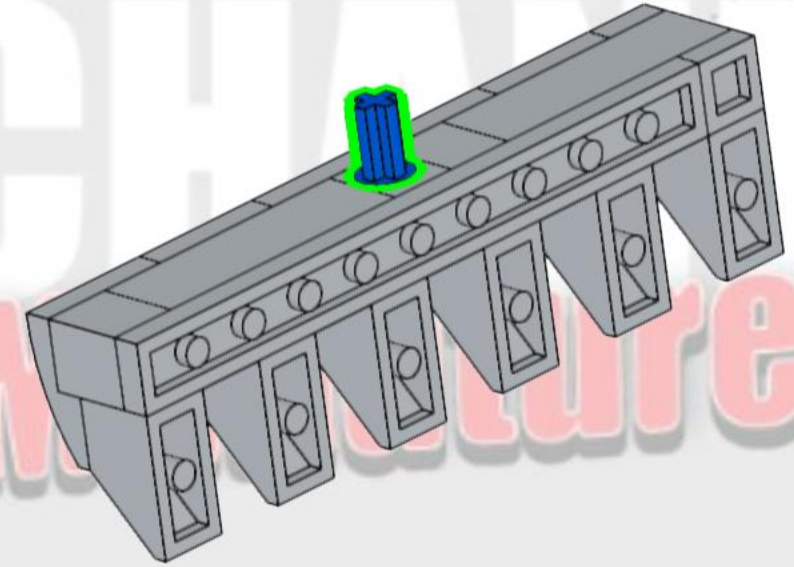

144

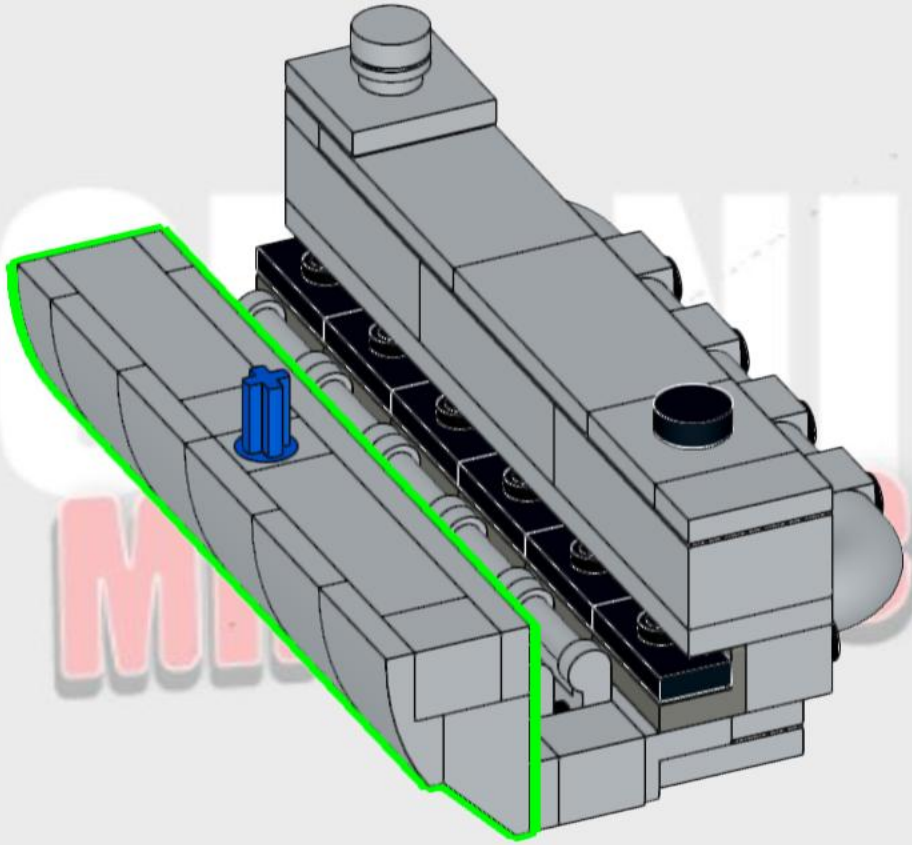

145

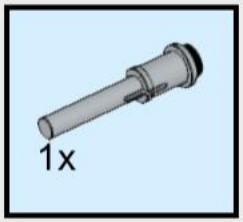

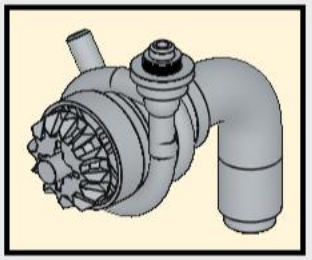

MECHANICAL
Miniatures

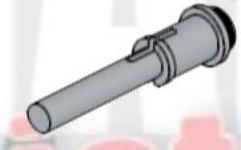

146



MECHANICAL
Miniatures



147

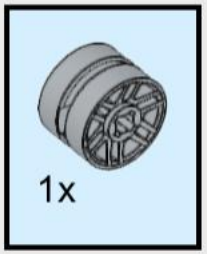

MECHANICAL
Miniatures

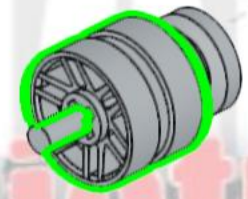

148

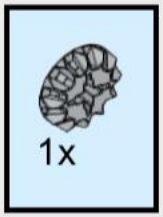

MECHANICAL
Miniatures

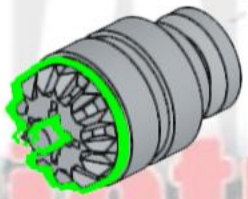

149



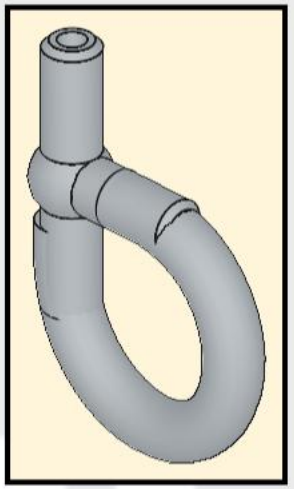

MECHANICAL
Miniatures



150

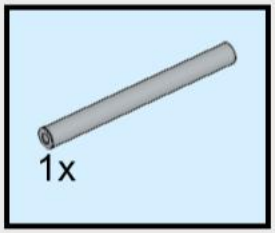

MECHANICAL
Miniatures

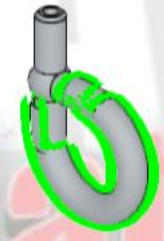

4 1:1

151



152



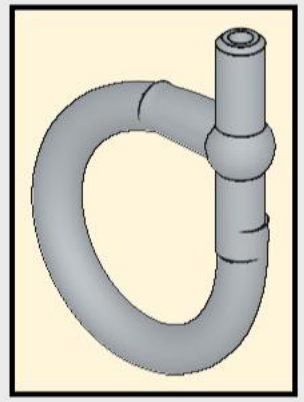

MECHANICAL
Miniatures

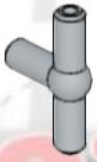

153

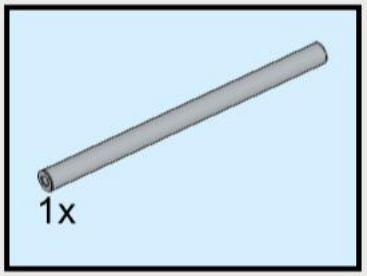

MECHANICAL
Miniatures

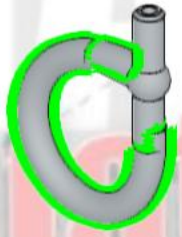

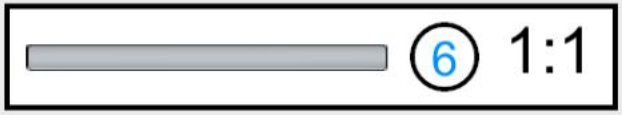

154

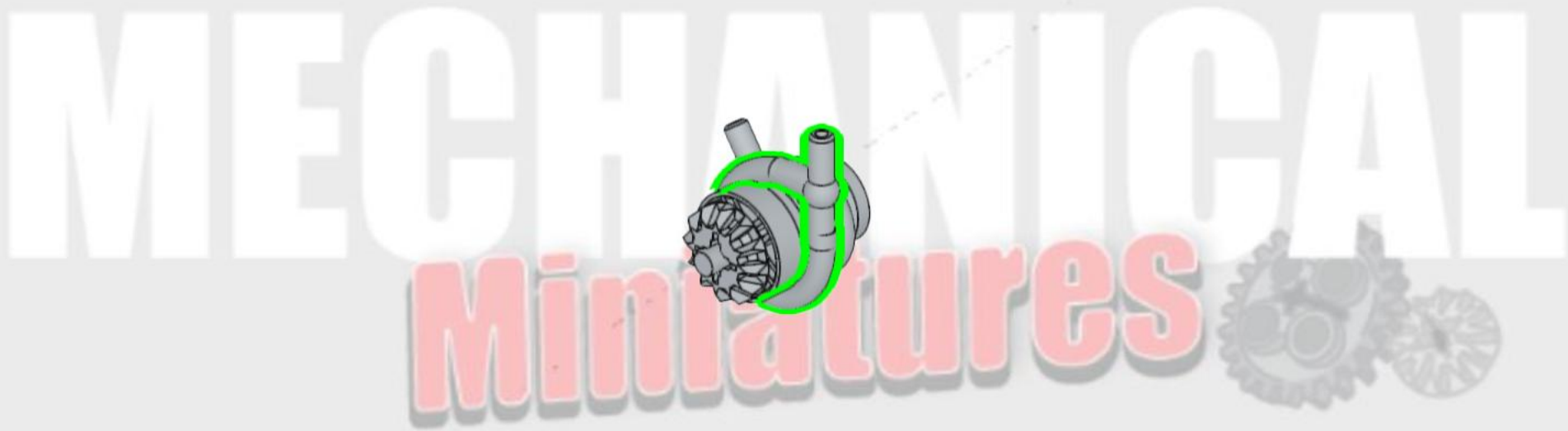

155

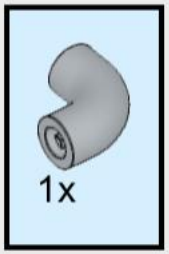

MECHANICAL
Miniatures

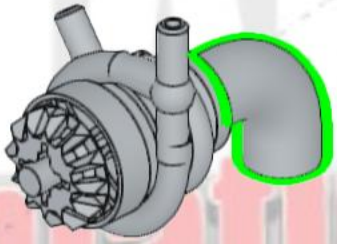

156

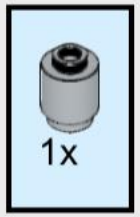

MECHANICAL
Miniatures

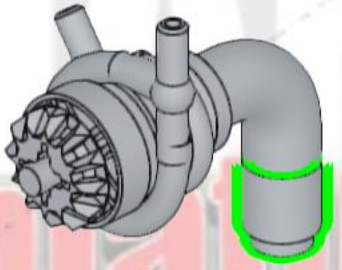

157

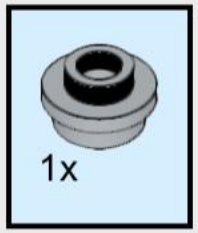

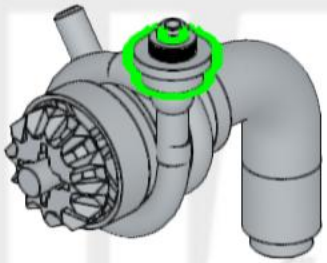

MECHANICAL
Miniatures

158

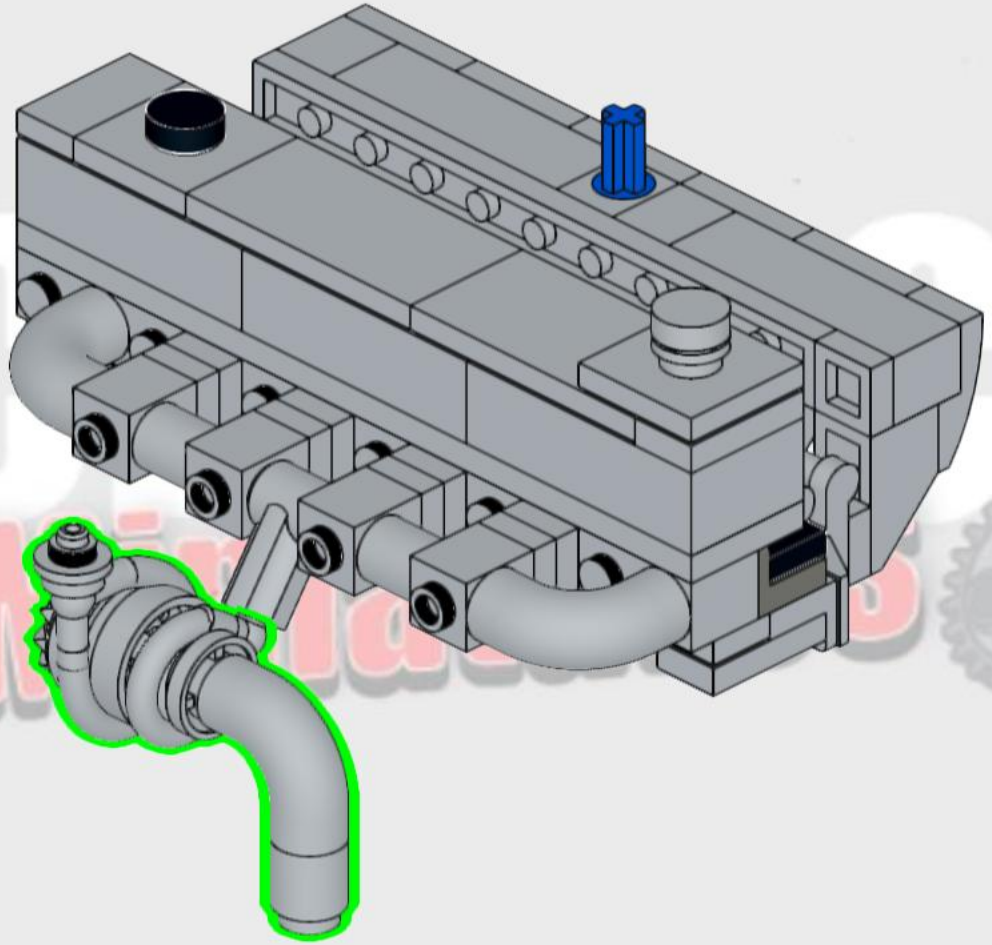

159

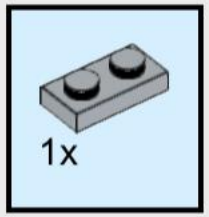

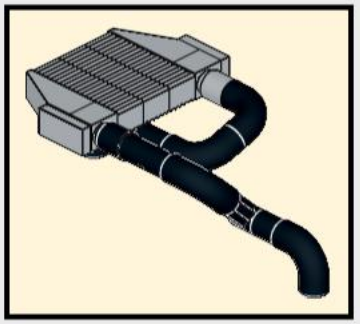

MECHANICAL
Miniatures

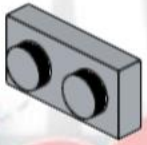

160

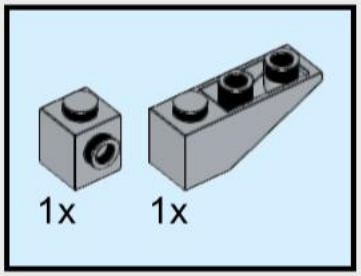

MECHANICAL
Miniatures

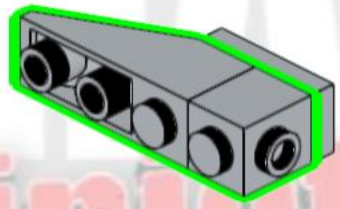

161

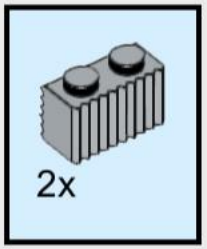

MECHANICAL
Miniatures

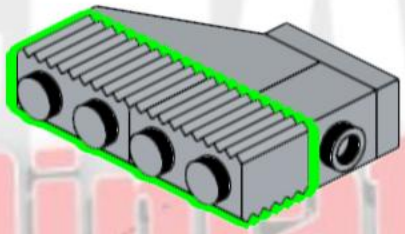

162



MECHANICAL Miniatures

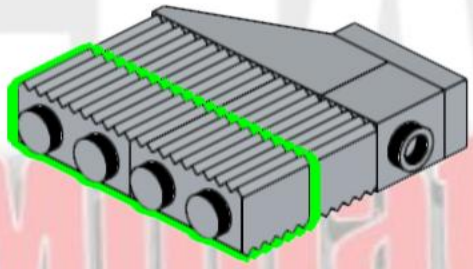

163

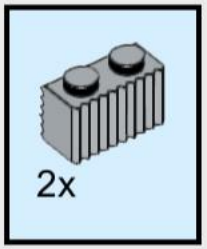

MECHANICAL Miniatures

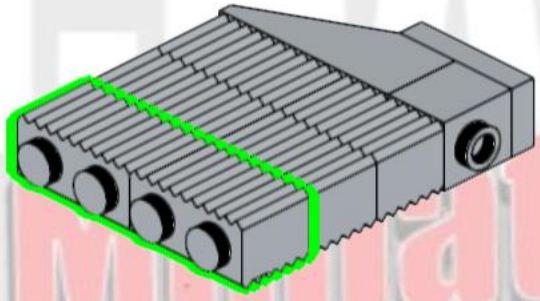

164

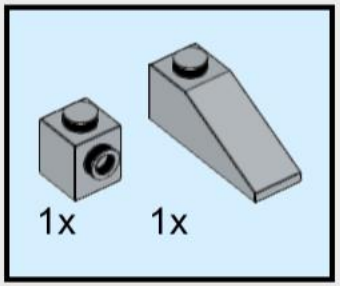

MECHANICAL
Miniatures

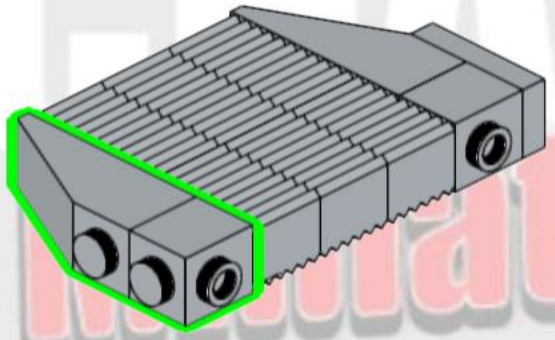

165

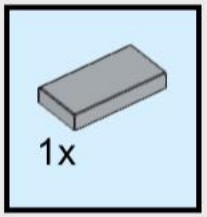

MECHANICAL
Miniatures

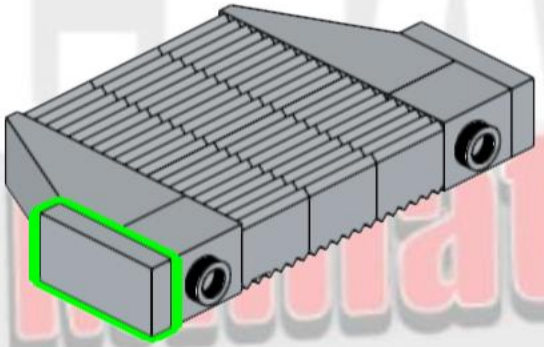



166



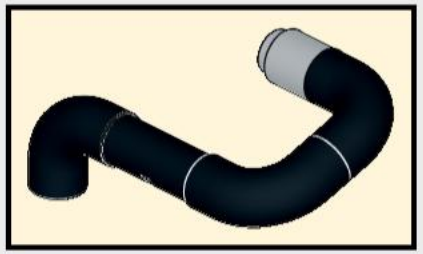

MECHANICAL
Miniatures



167

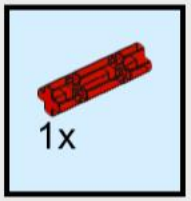

MECHANICAL
Miniatures



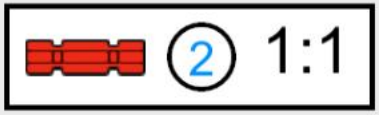

168



MECHANICAL
Miniatures



169

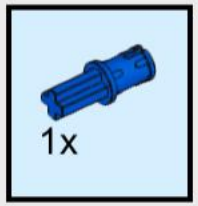

MECHANICAL
Miniatures



170



MECHANICAL
Miniatures



171

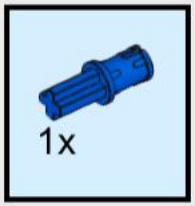

MECHANICAL
Miniatures



172



1x

MECHANICAL Miniatures



173

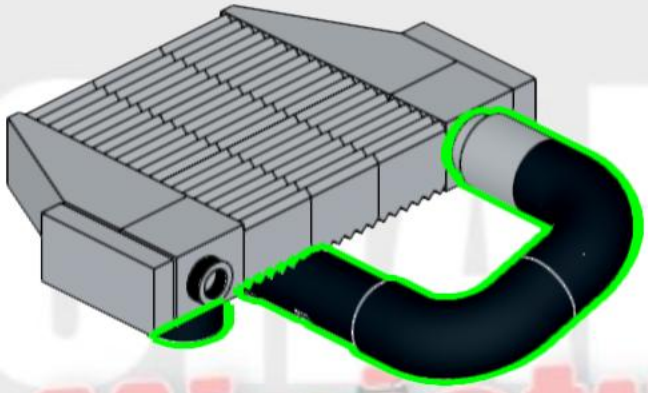

MECHANICAL
Miniatures

174

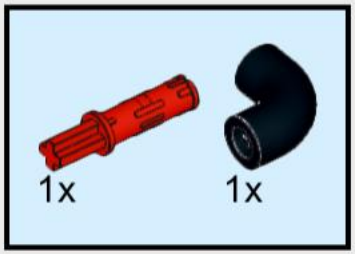

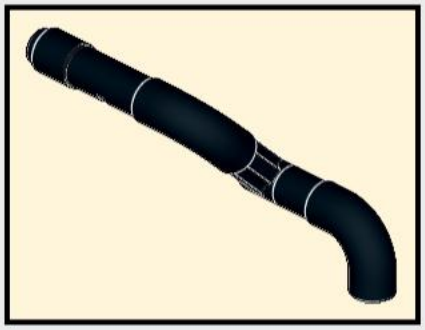

MECHANICAL
Miniatures



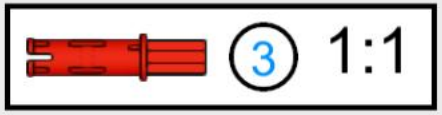

175



MECHANICAL
Miniatures



176



MECHANICAL
Miniatures



177

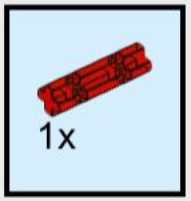

MECHANICAL
Miniatures



2 1:1

178





MECHANICAL
Miniatures

179

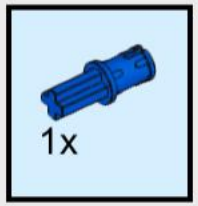



MECHANICAL
Miniatures

180





MECHANICAL
Miniatures

181



MECHANICAL
Miniatures

182

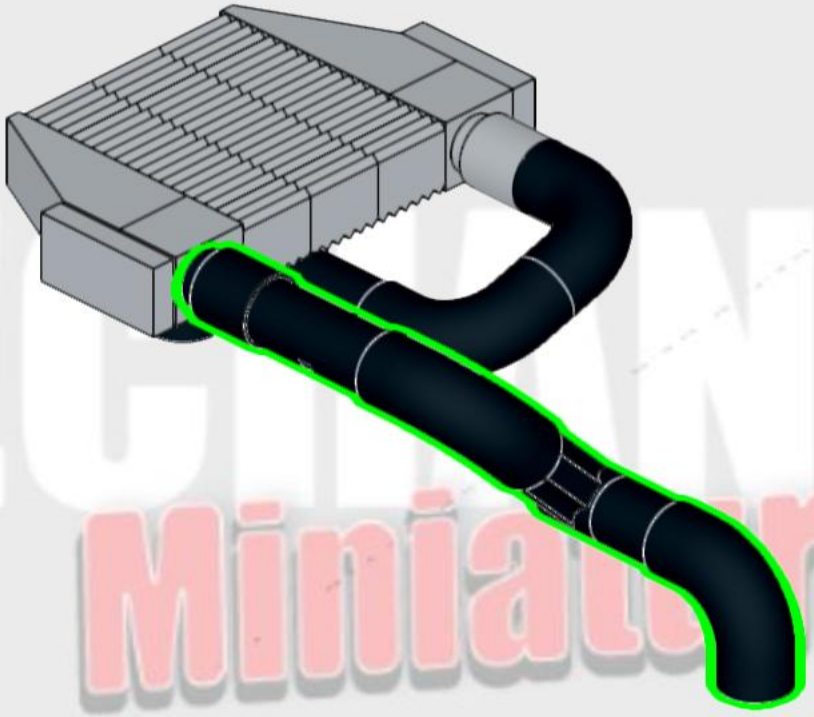

MECHANICAL Miniatures

183

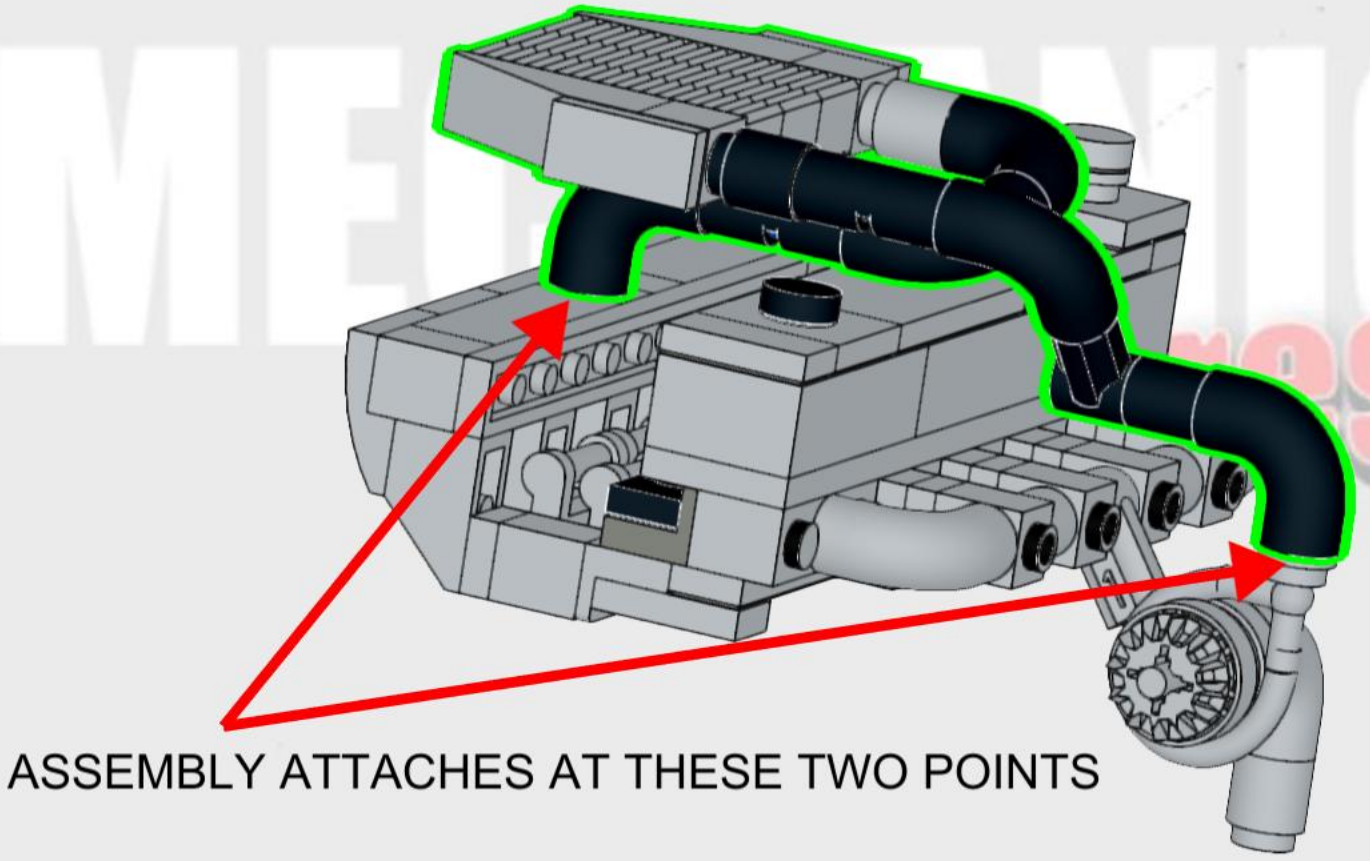

ASSEMBLY ATTACHES AT THESE TWO POINTS

184

